LEA

LIVING ROOM

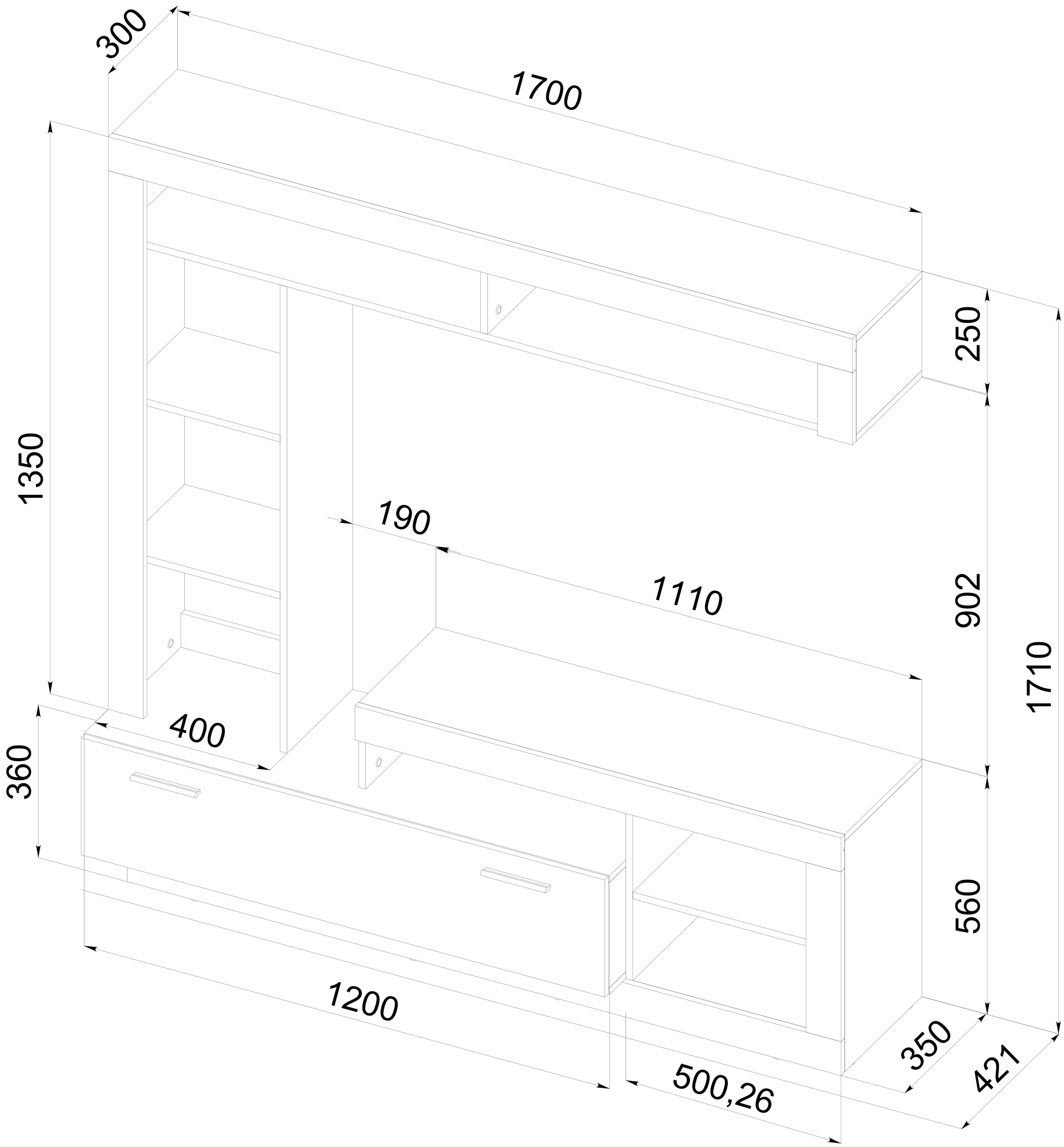

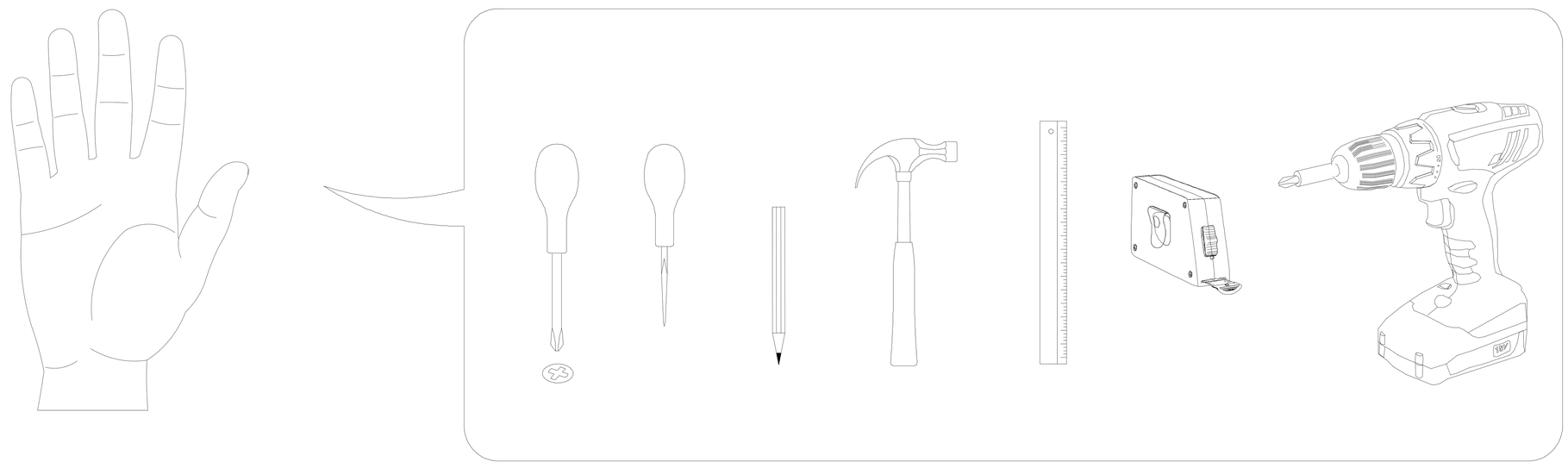

E5	3,5x16	x62	L1		x2	F3	6,3*13mm	x4
J1	5*16mm	x12	I2	128mm	x2	E12	4*25mm	x4
R4	№4	x1	B	⌀12mm	x6	B1	6,3*50mm	x6
A1	8*30mm	x21	V1	4,2*16mm	x4	K1		x12
D	⌀20mm	x46	C1	6*43mm	x50	D1	15/16mm	x50
E4	3*20mm	x8	H5	8*50mm	x2	Ea4	4,2*65mm	x2
R3	1,4*25mm	x312	V2		x13	V3		x2
N4	R + L	x2	Z1	M6	x1			

W

№	a*b	x
1L + R	404x248	2
1	248x404	1
2	1200x404	1
3	1200x404	1
4	334x80	2
5	1630x80	1
6	1196x276	1
7	1196x276	1

X

№	a*b	x
1L	334x184	1
1R	544x334	1
1	544x334	1
2	1110x334	1
3	468x334	1
4	468x334	1
5	1110x80	1
6	400x80	1

Y

№	a*b	x
1L + R	1100x284	2
1	368x284	2
2	368x80	2
3	1096x396	1
4	1270x80	3

Z

№	a*b	x
1L + R	284x218	2
1	284x218	1
2	1700x284	1
3	1700x284	1
4	1700x80	1
5	170x80	1
6	1696x246	1

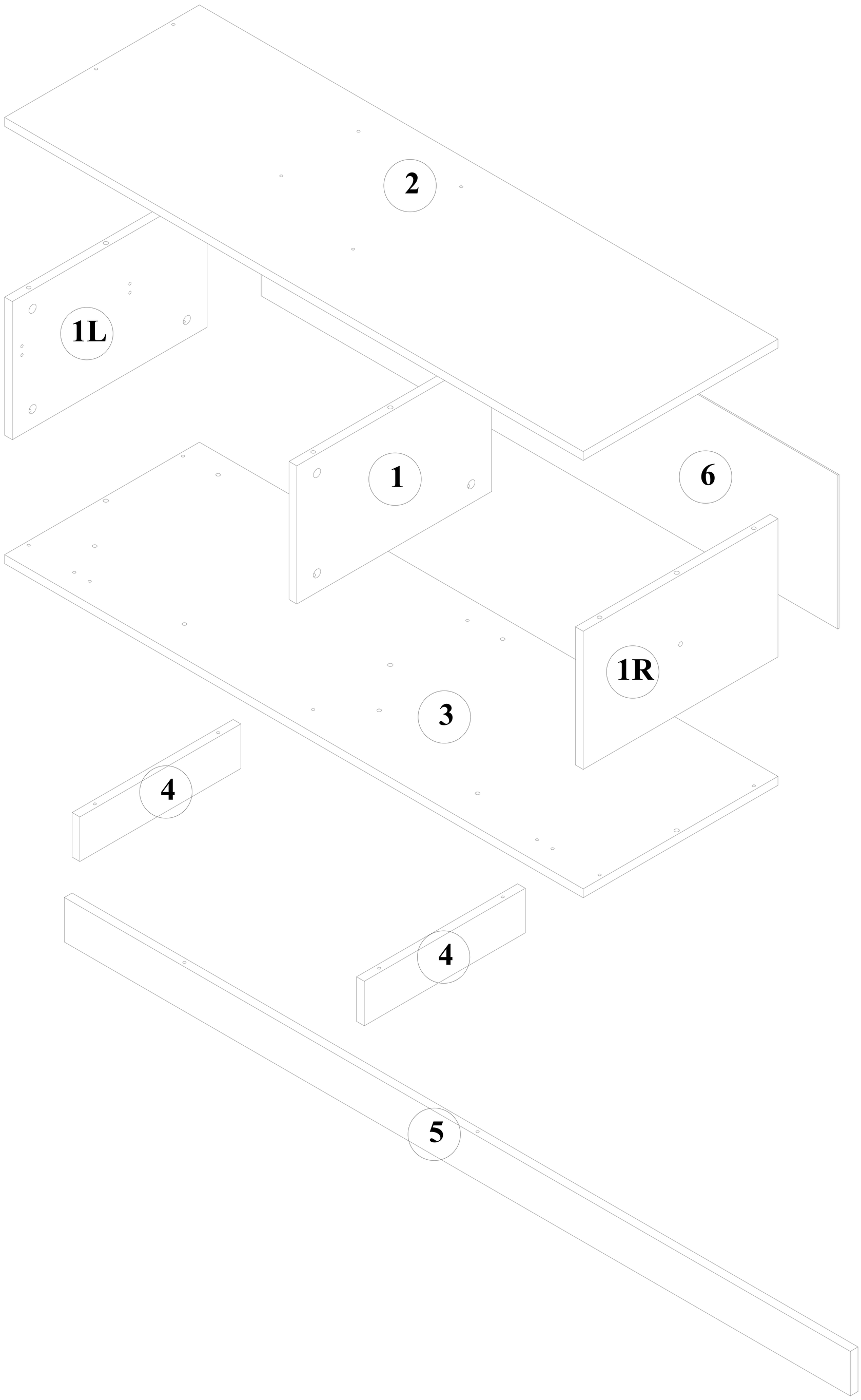
2
1L
1
6
1R
3
4
4
5

B	⌀12mm	x6
B1	6,3*50mm	x6
K1	00*00mm	x8

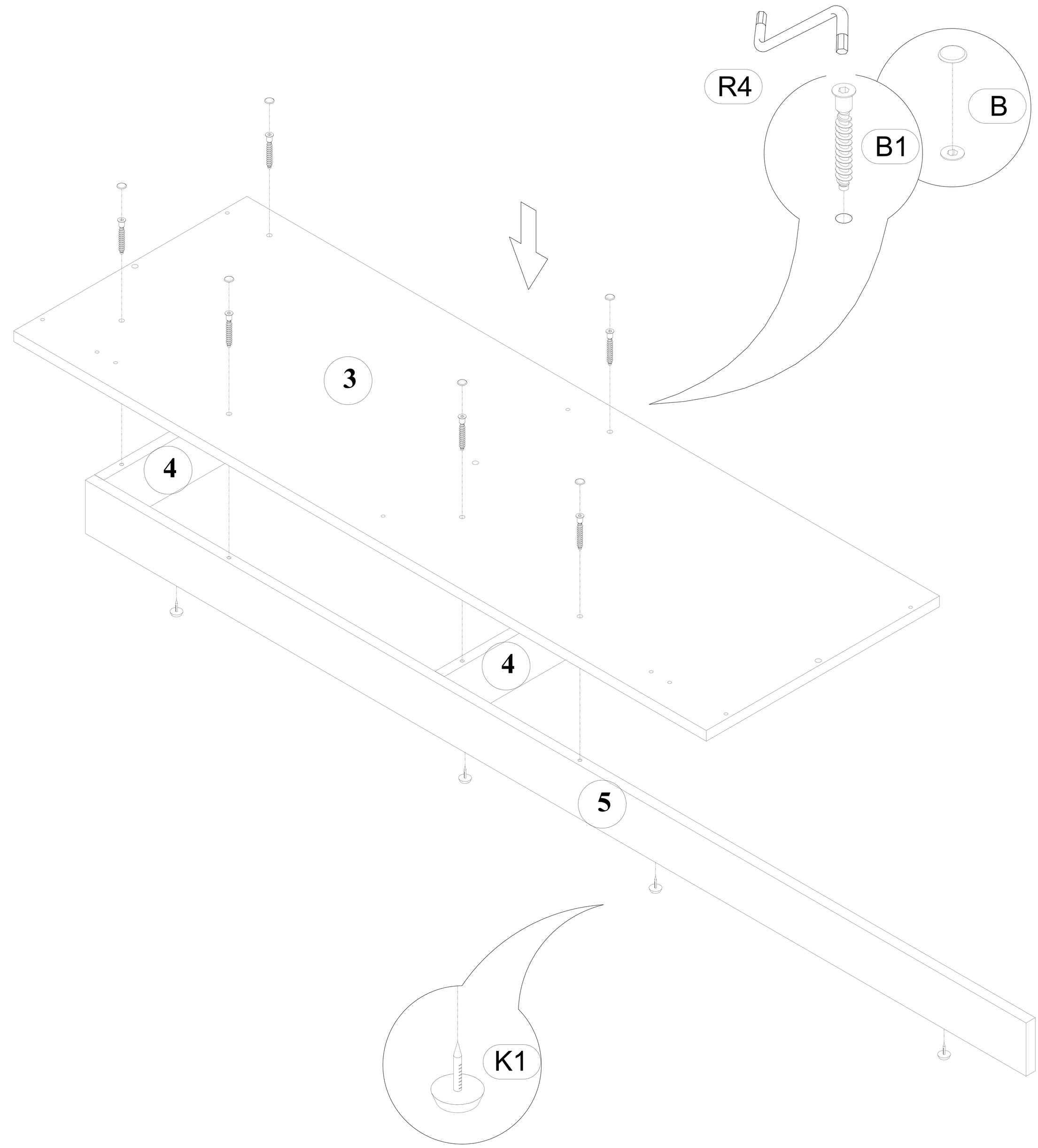

D1	15/16mm	x6
D	Ø20mm	x6
C1	6*43mm	x6
A1	8*30mm	x3

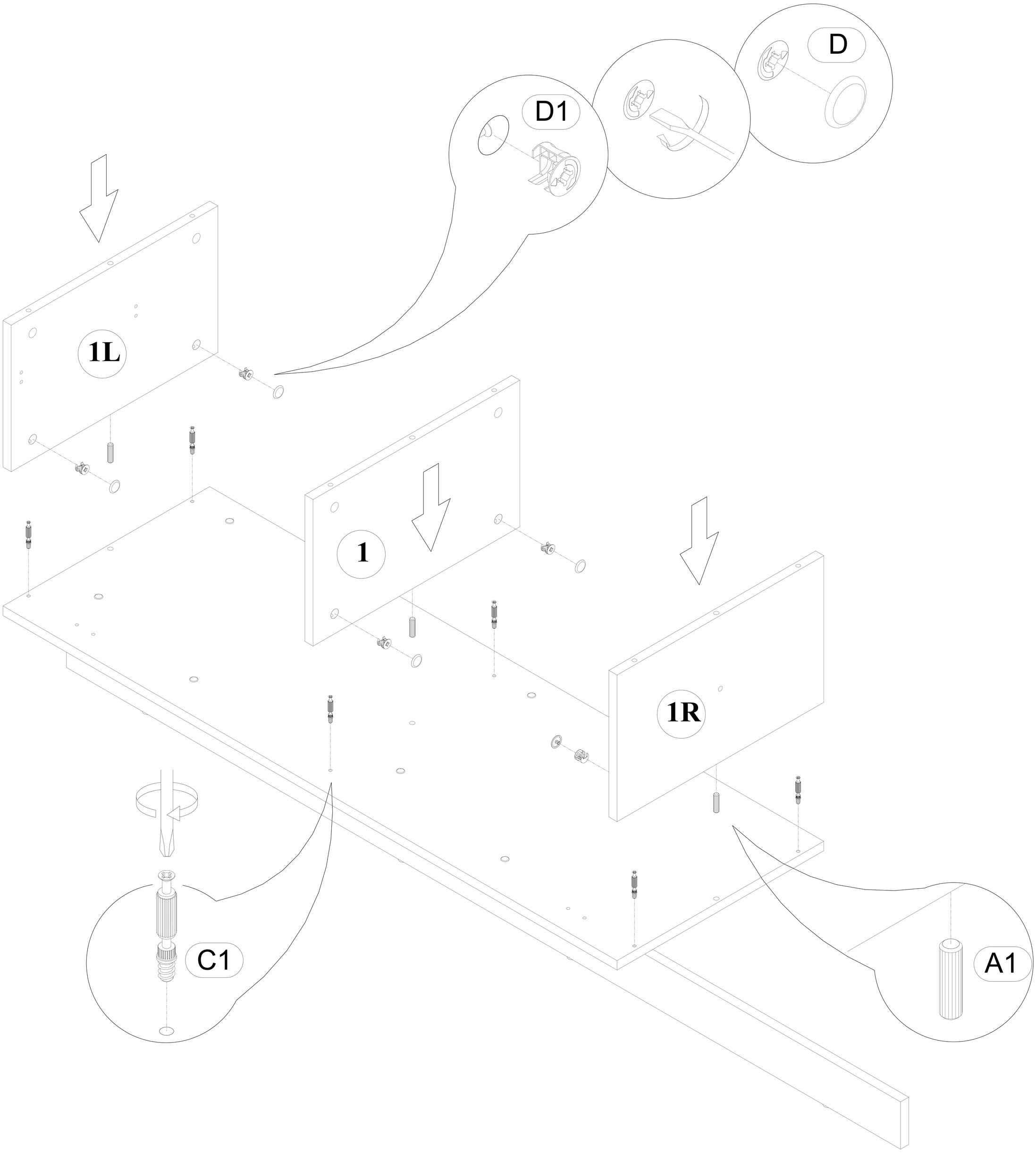

D1	15/16mm	x6
D	Ø20mm	x6
C1	6*43mm	x6
A1	8*30mm	x3

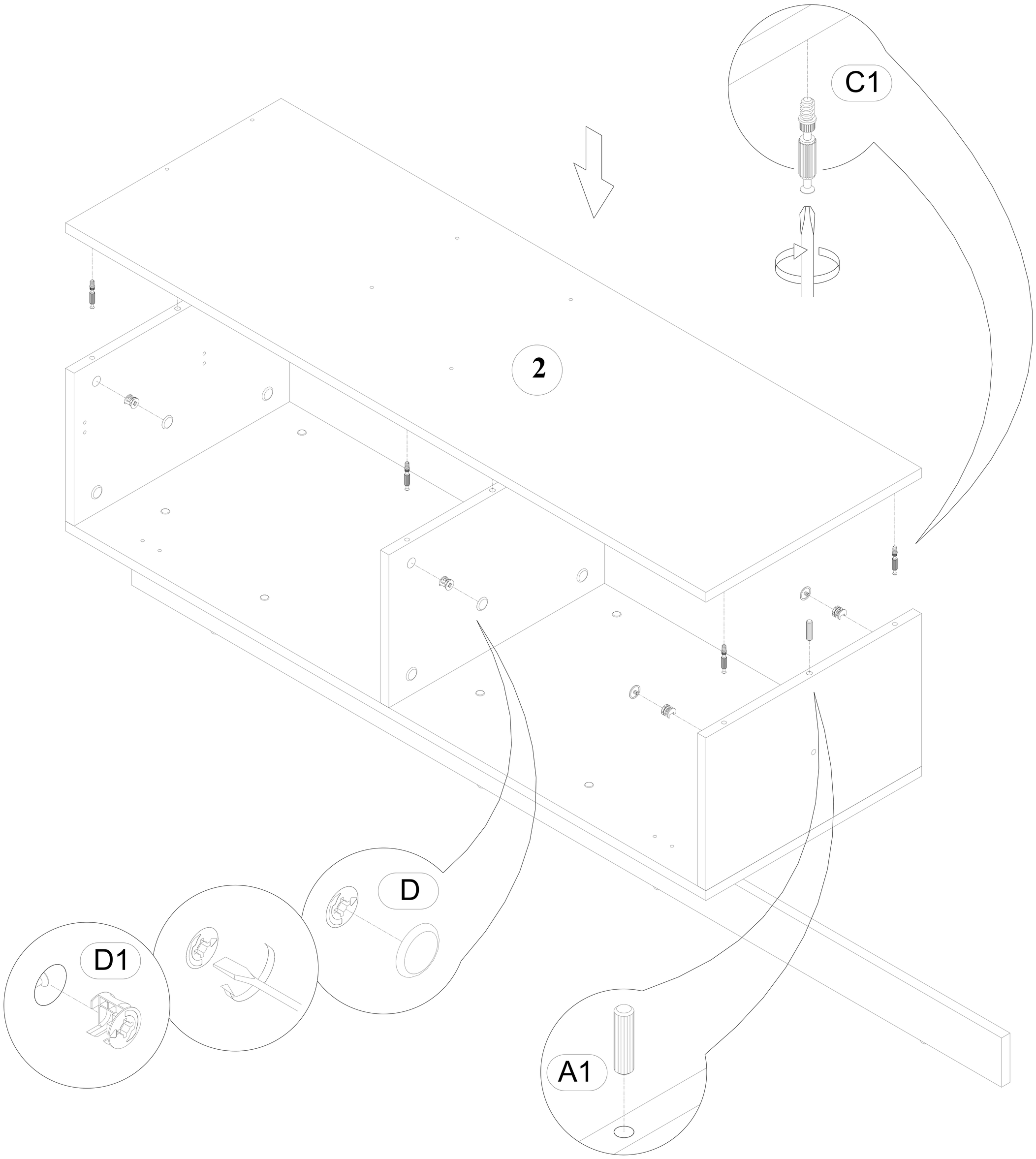

E5	3,5x16	x4
L1		x2
F3	6,3*13mm	x4
R3	1,4*25mm	x28
I2	128mm	x2
E12	4*25mm	x4

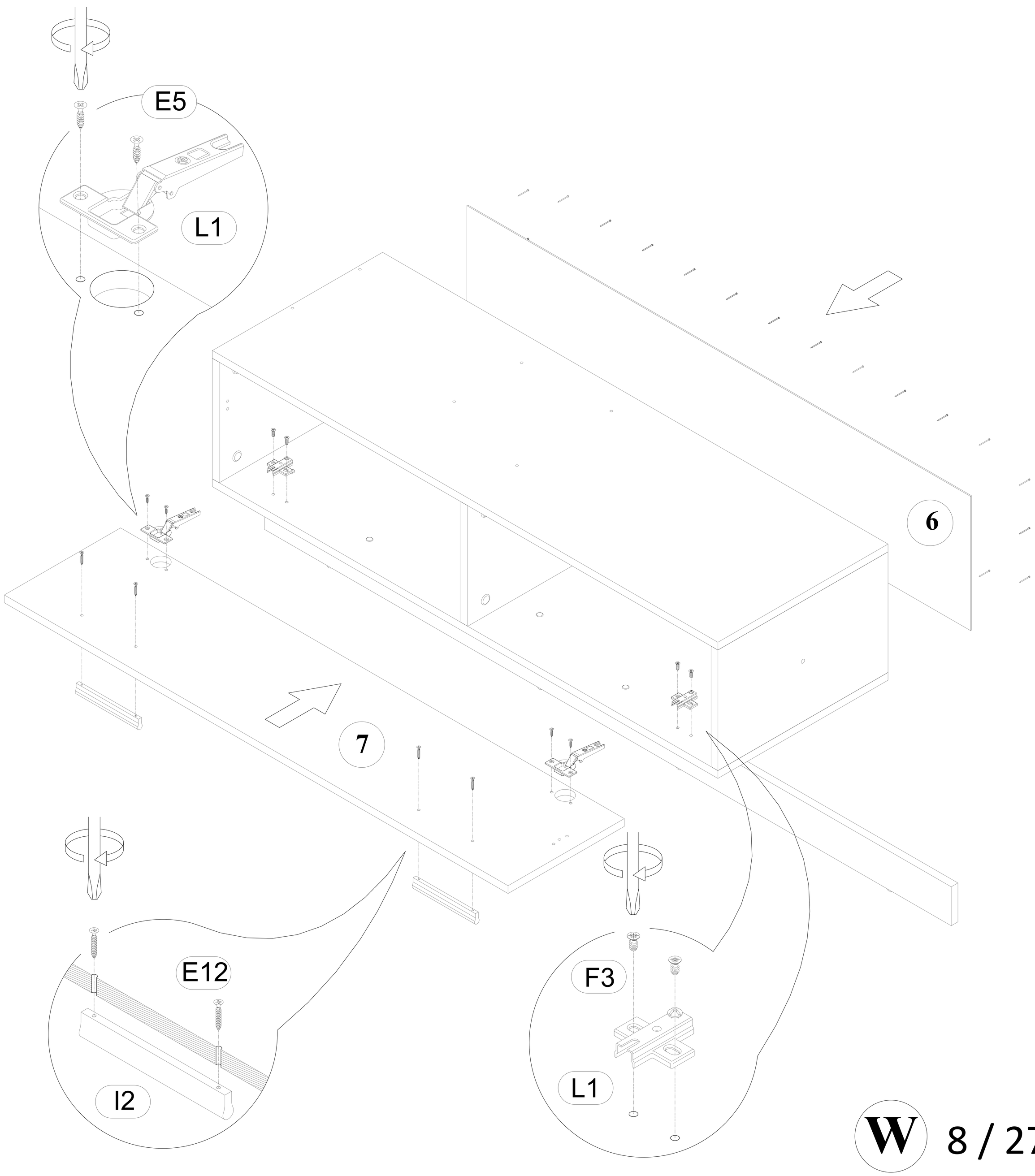

E5	3,5x16	x6
E4	3*20mm	x8
N4	R + L	x2

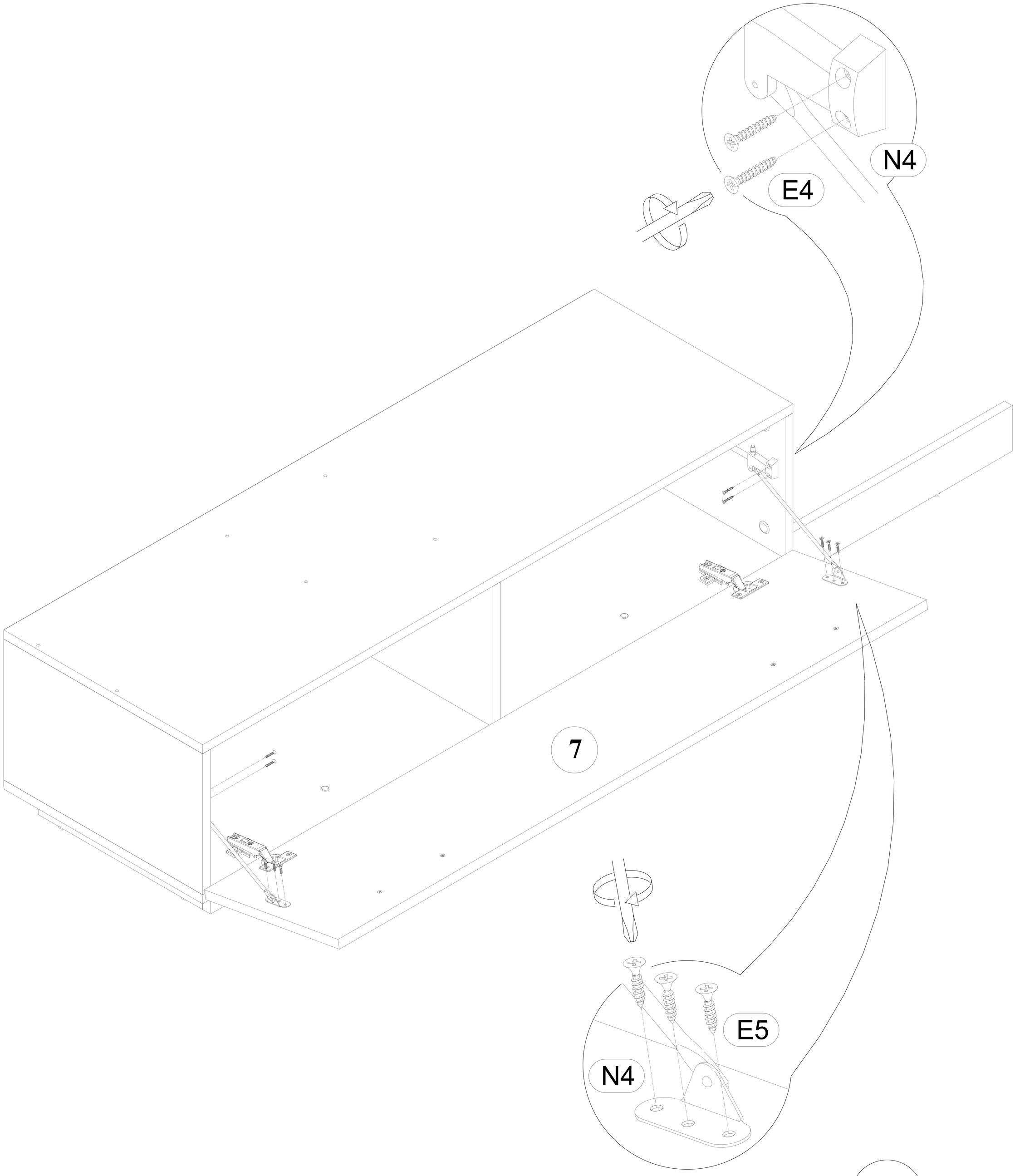

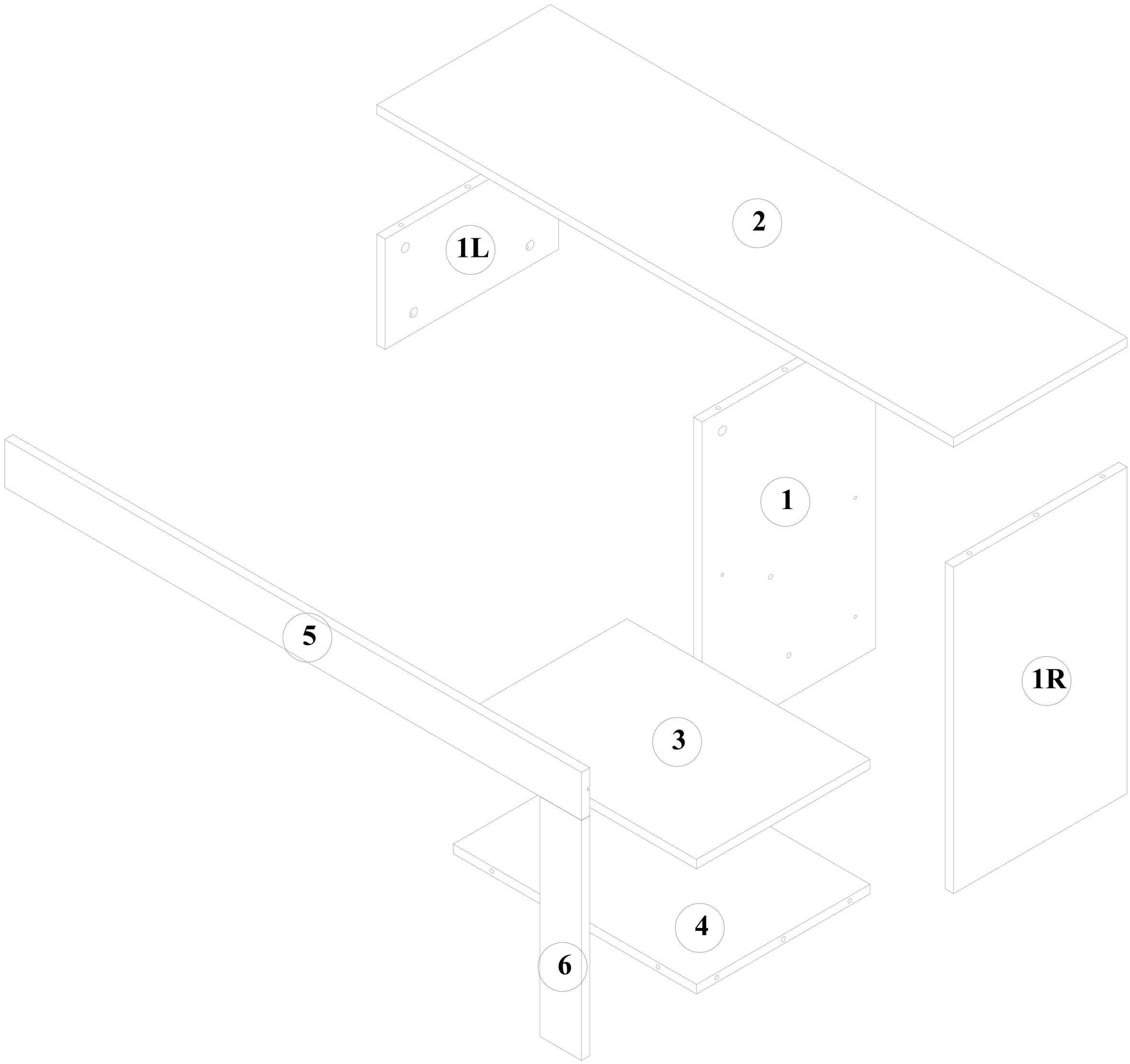

X

D1	15/16mm	x4
D	Ø20mm	x4
C1	6*43mm	x4
A1	8*30mm	x3

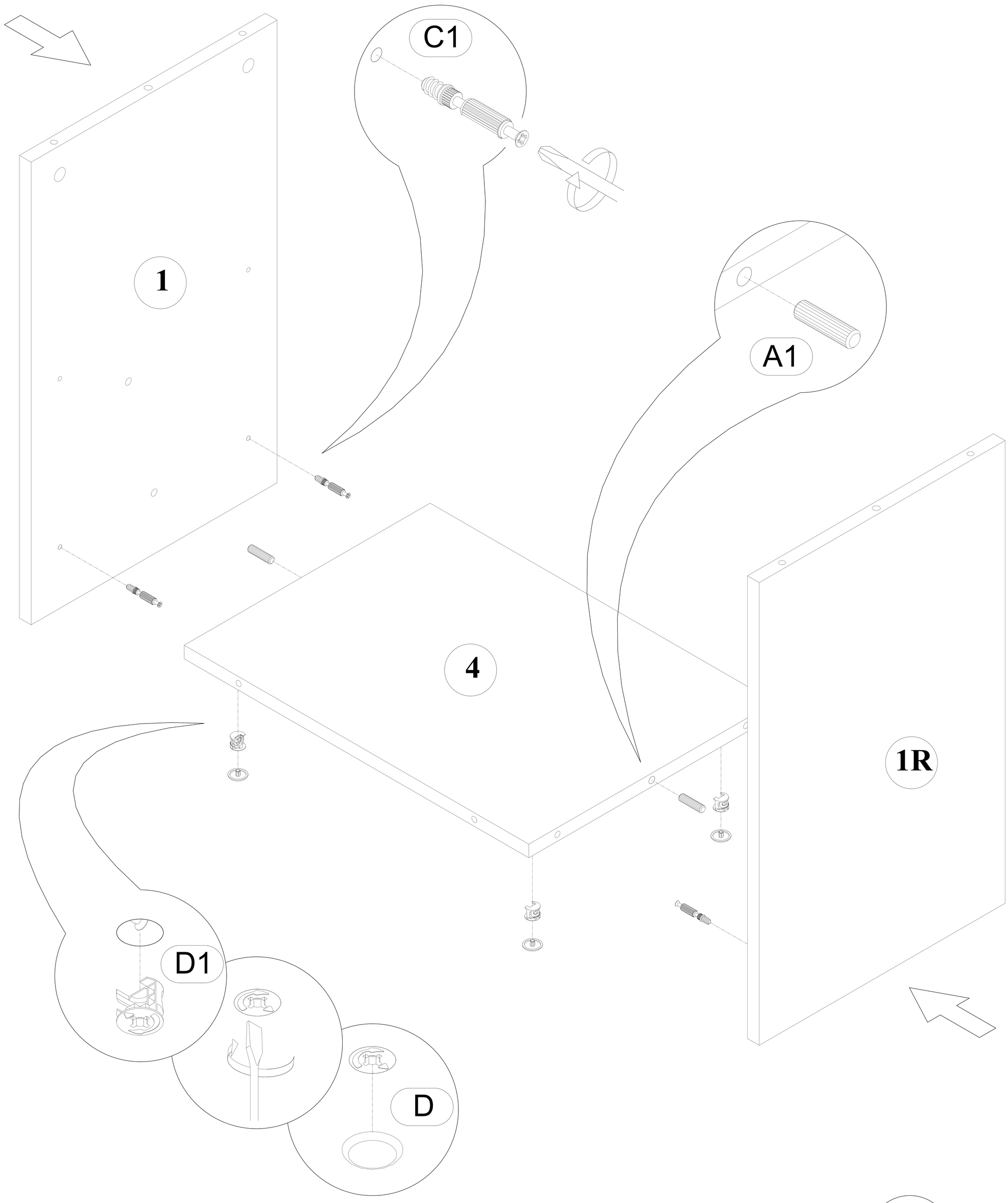

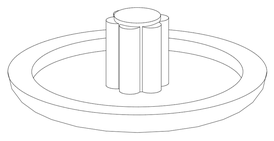 D Ø20mm	x4	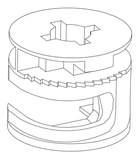 D1 15/16mm	x4	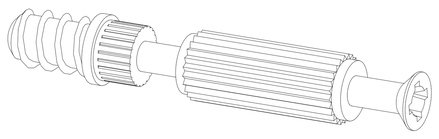 C1 6*43mm	x4

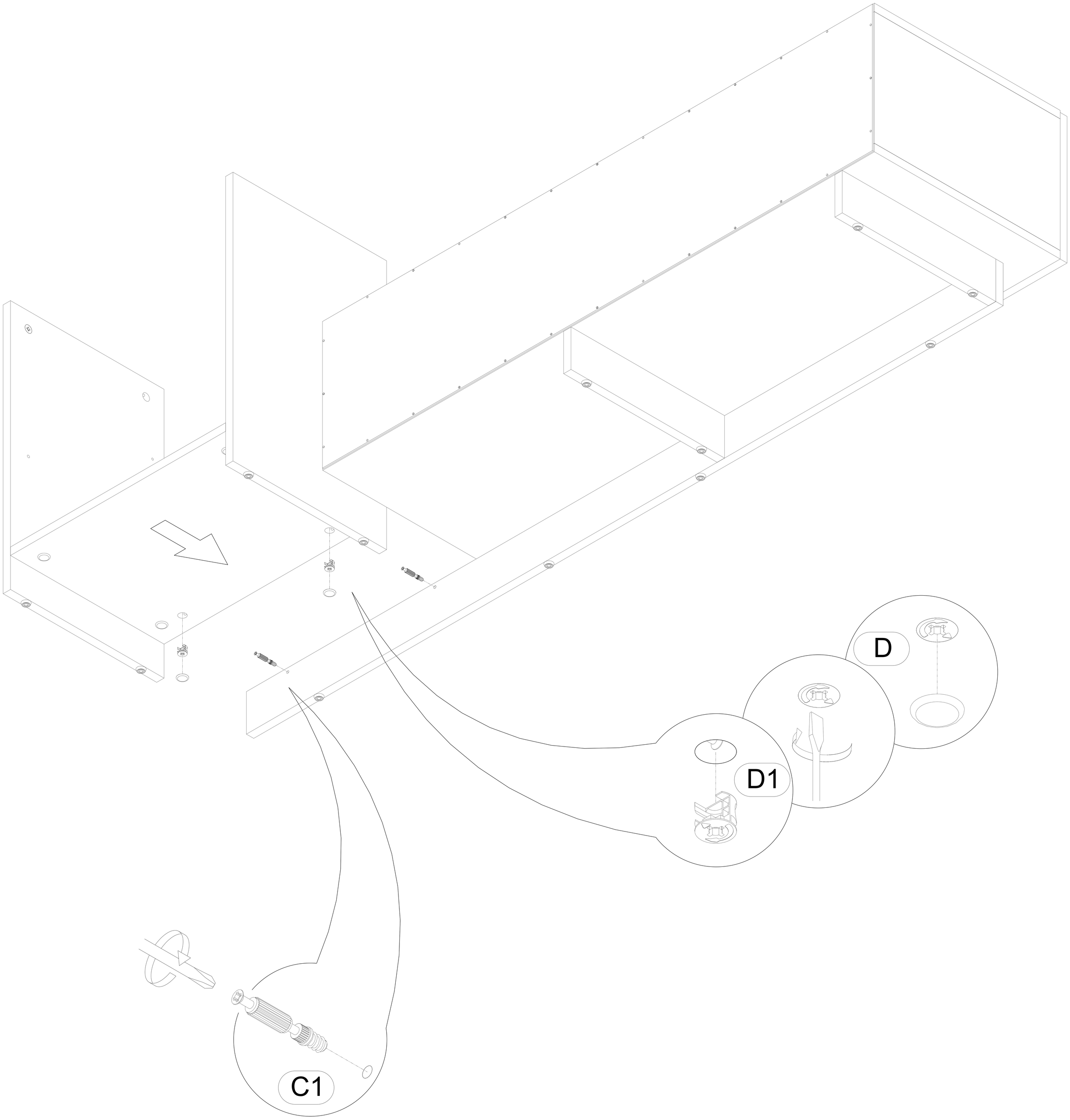

E5	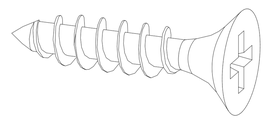	3,5x16	x16	V2	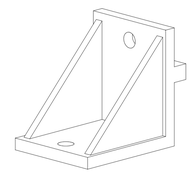	x5

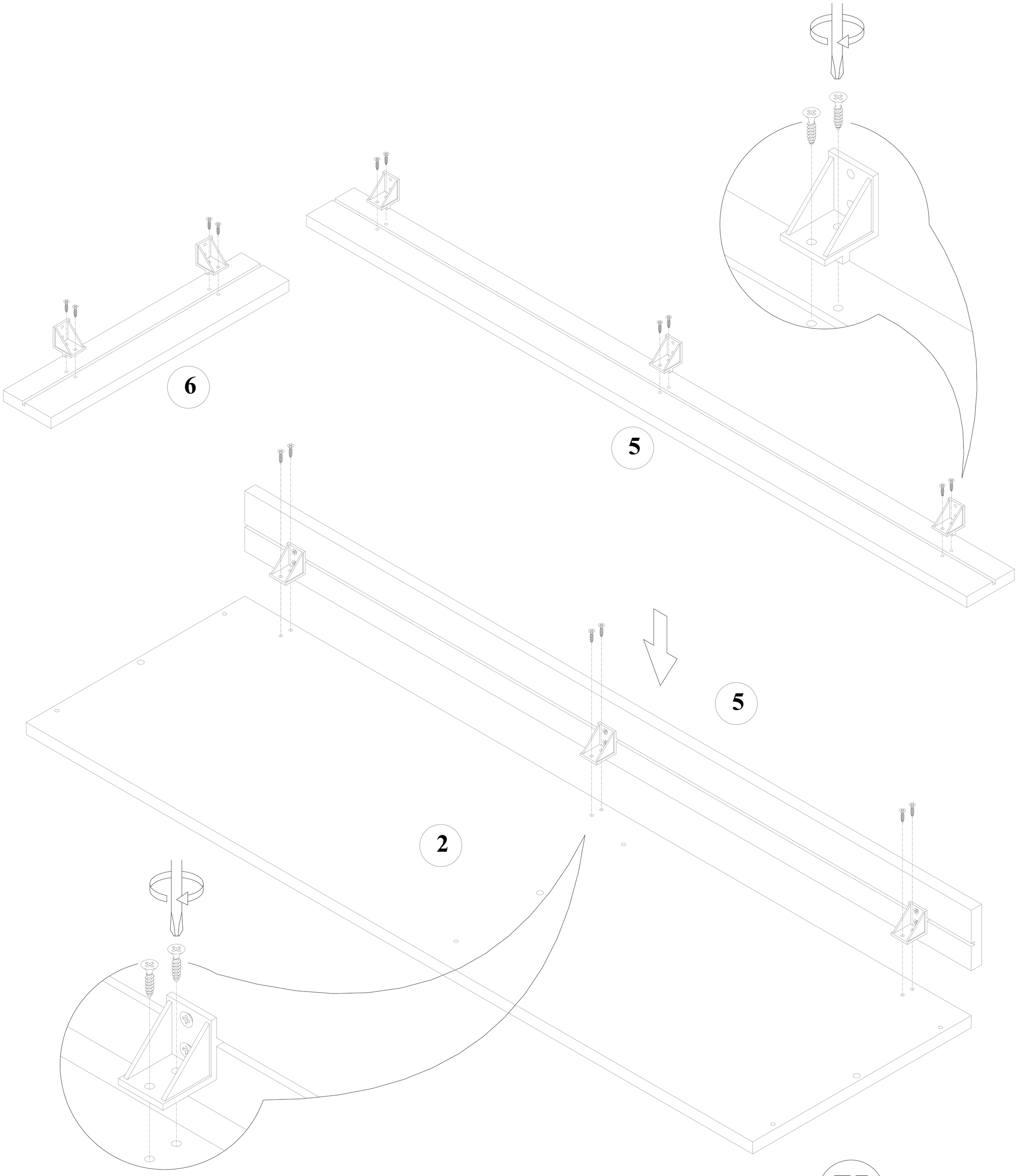

D1	15/16mm	x8
D	Ø20mm	x8
C1	6*43mm	x8
A1	8*30mm	x3
Z1	M6	x1

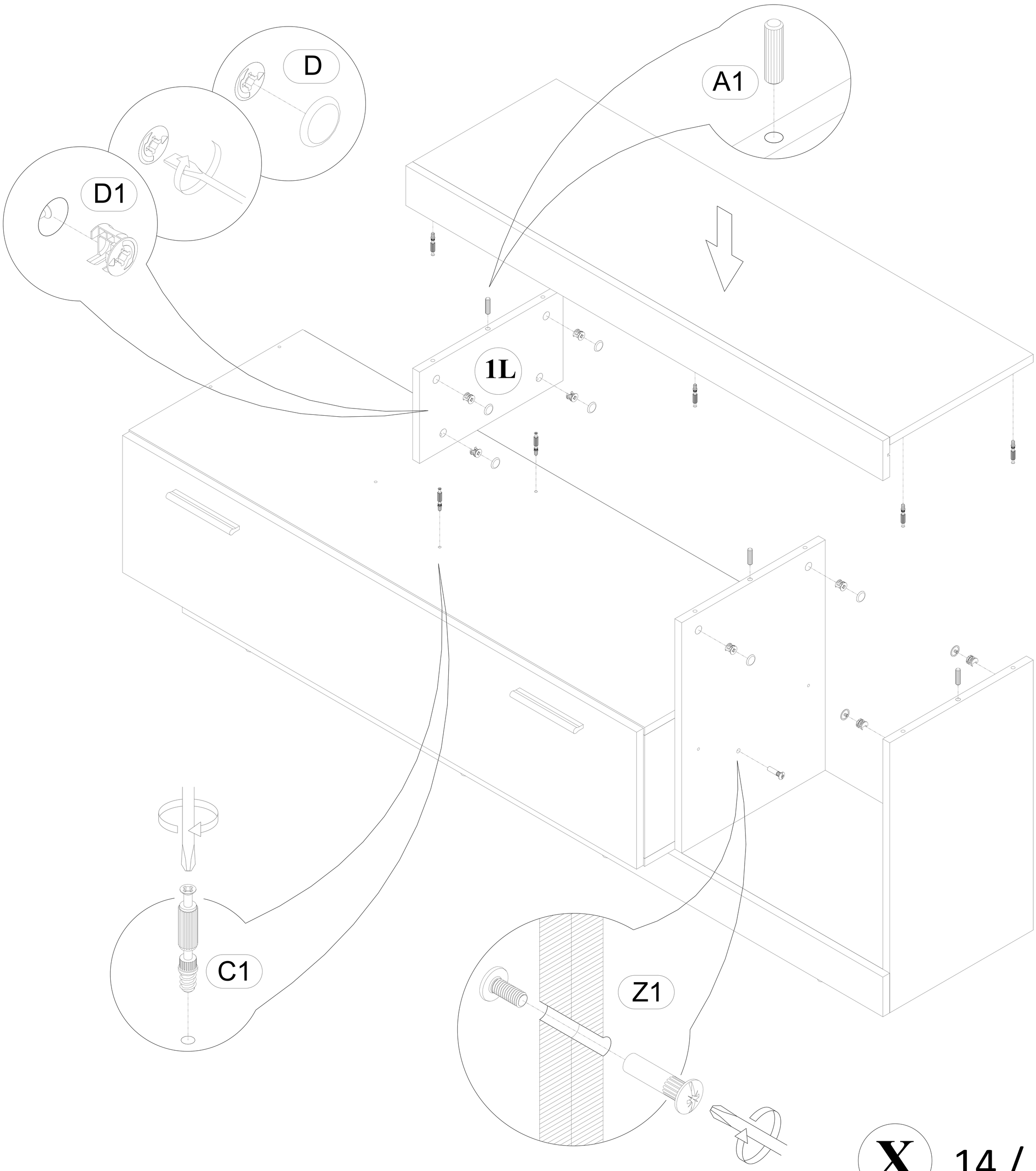

E5	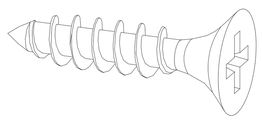 3,5x16	x4	J1	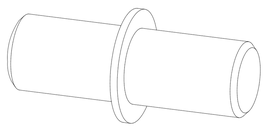 5*16mm	x4

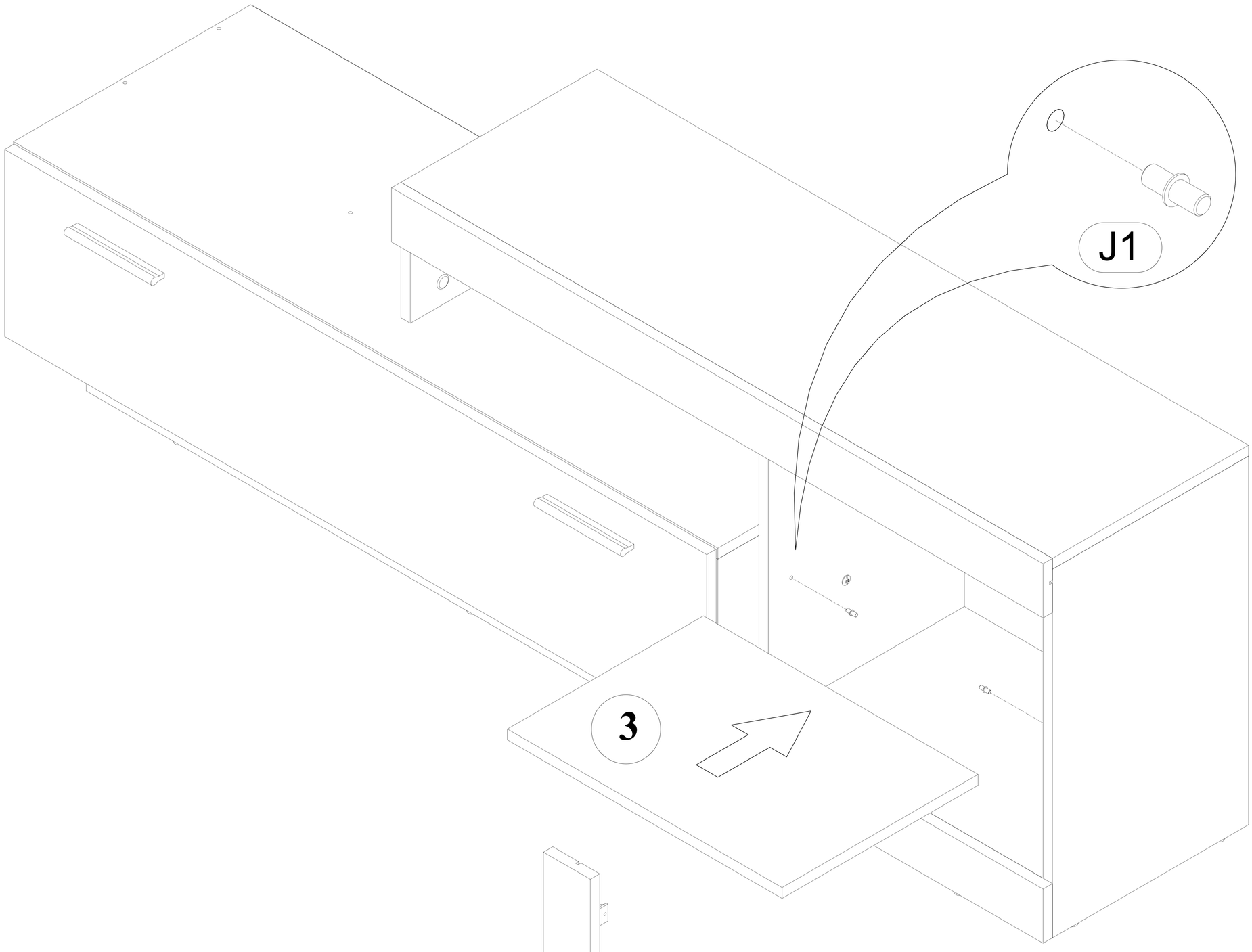

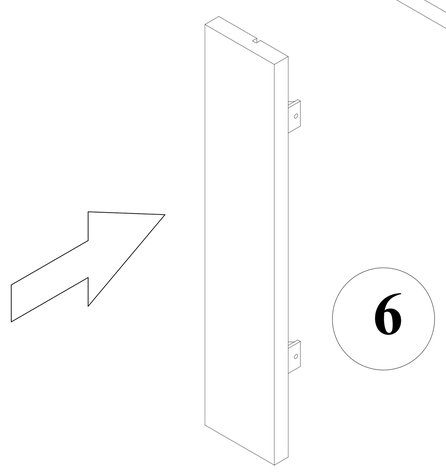

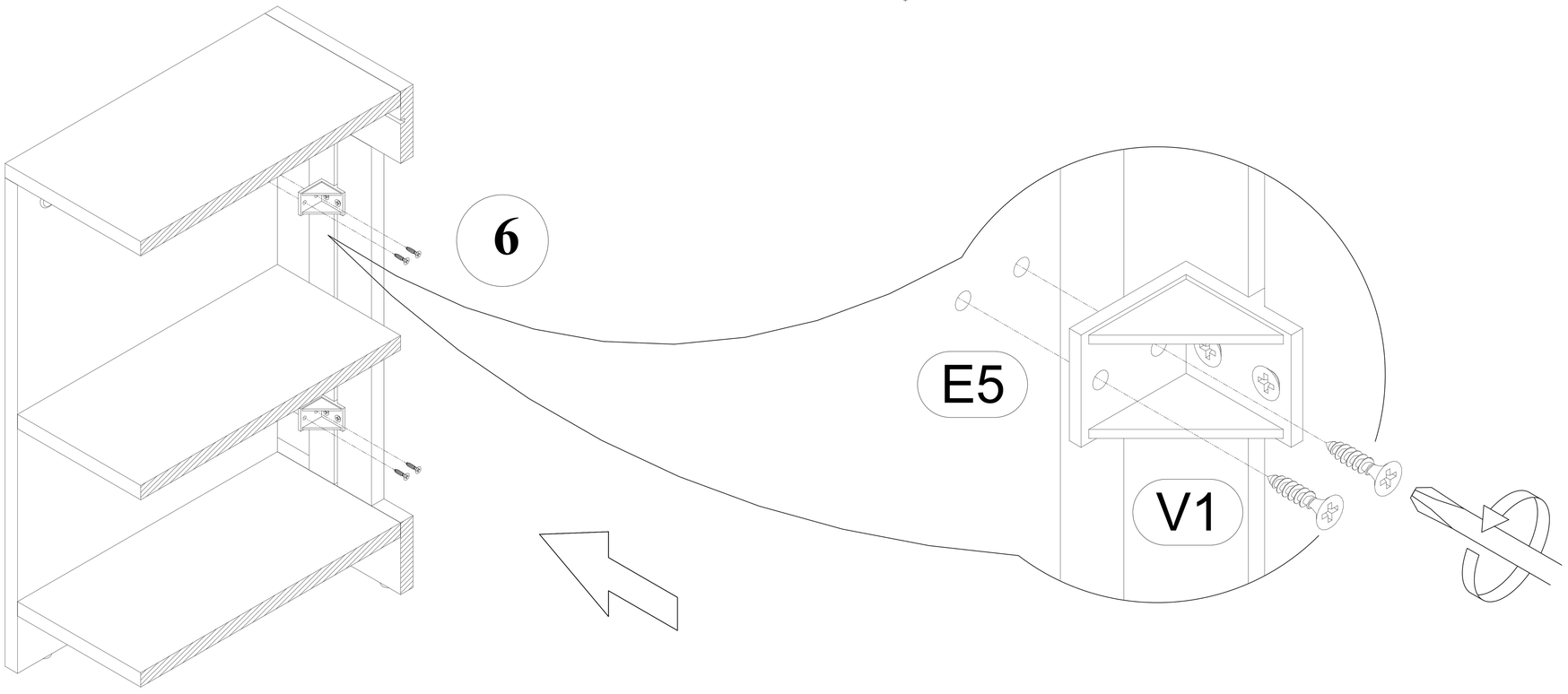

LEA

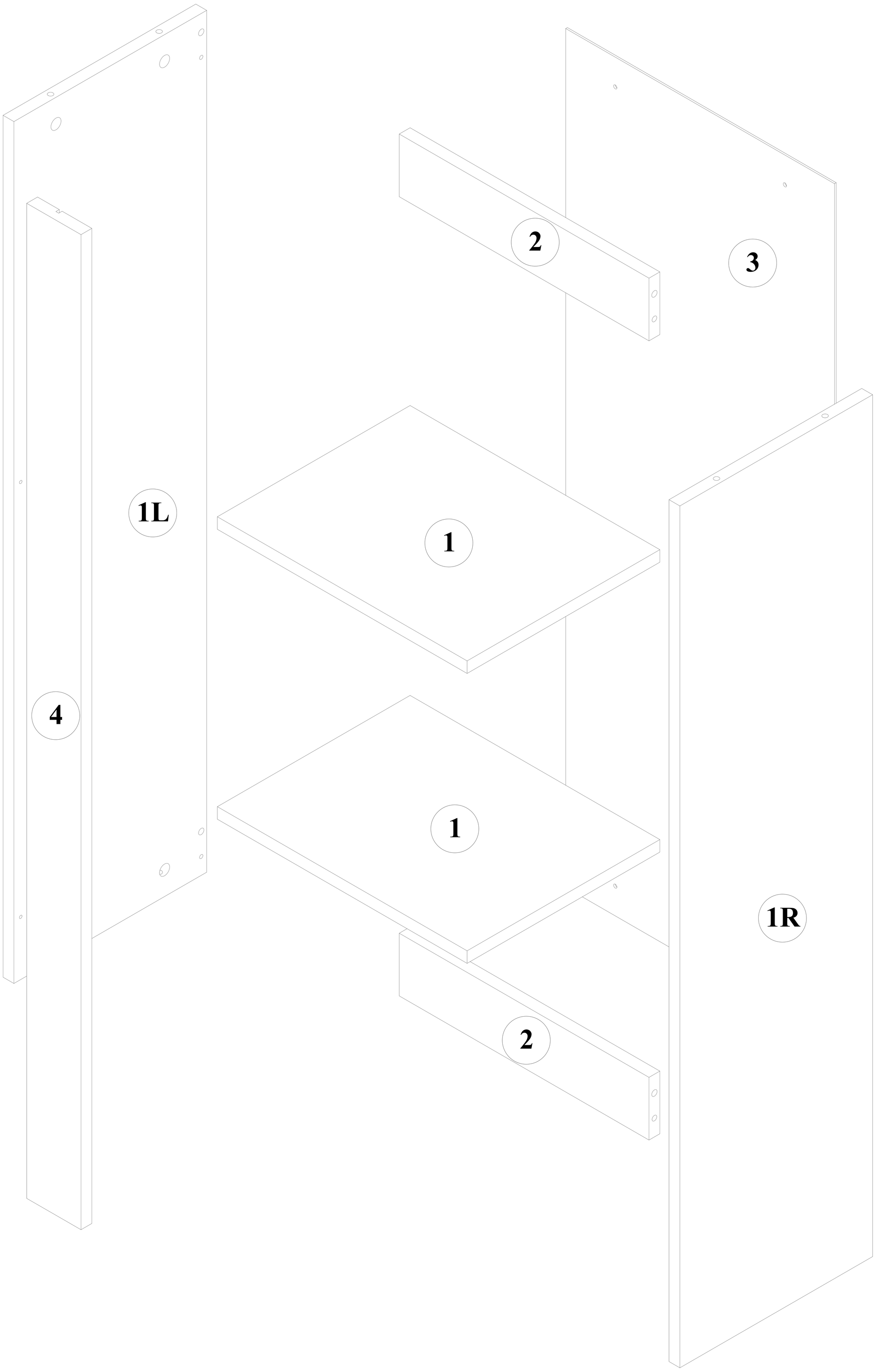

Y

A1	8*30mm	x4
D1	15/16mm	x4
C1	6*43mm	x4

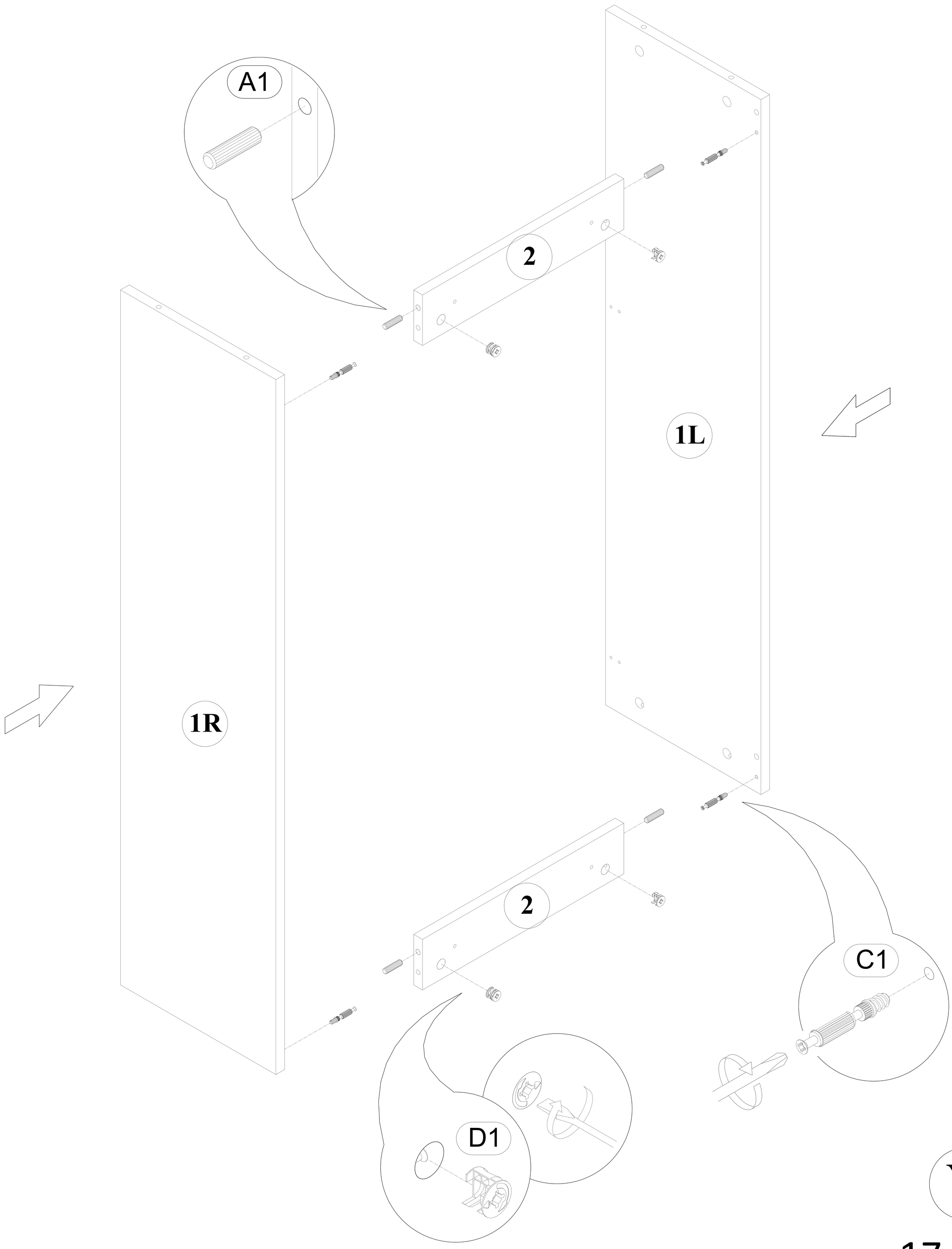

Y

E5	3,5x16	x8
J1	5*16mm	x8
V2		x2

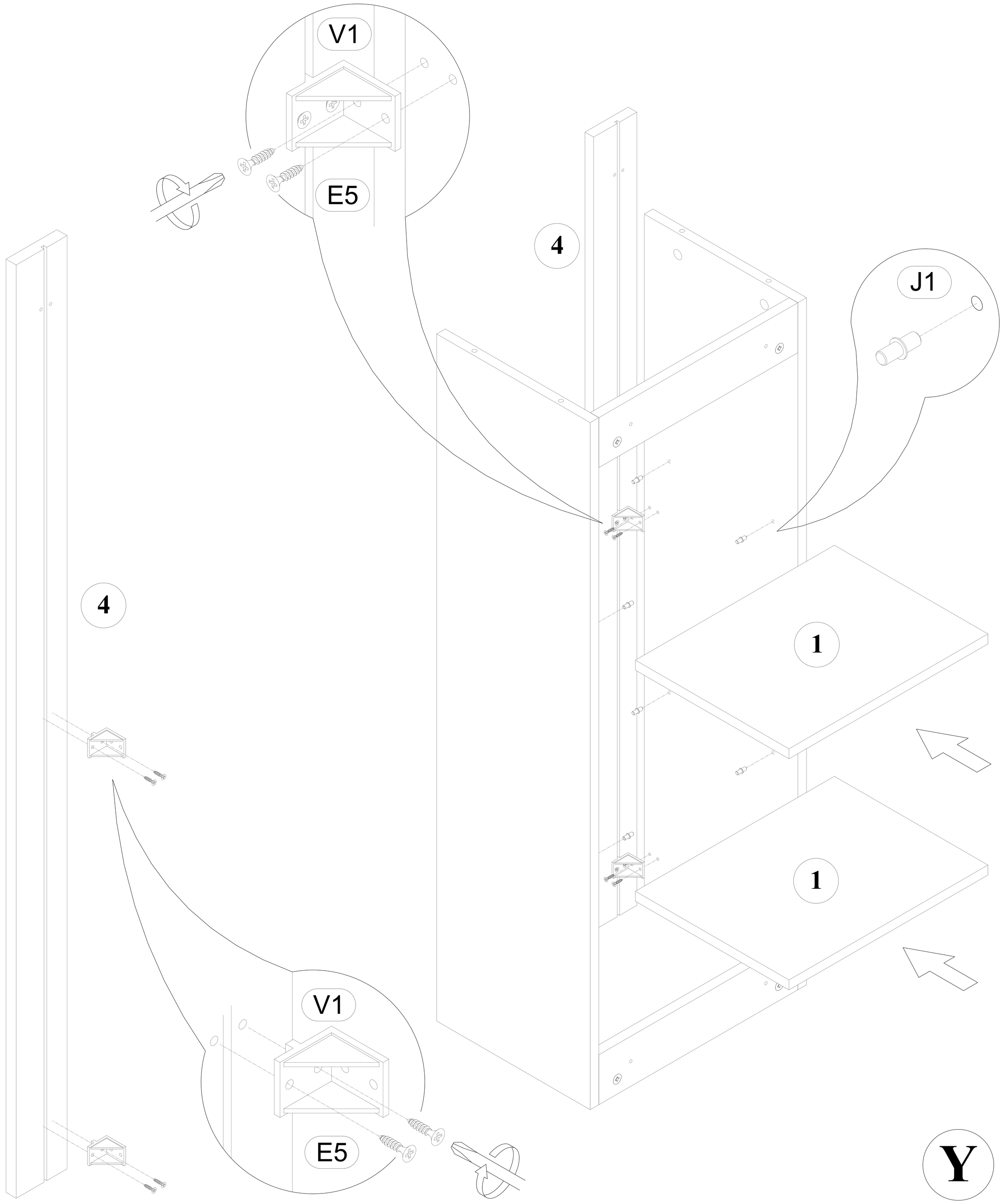

V1	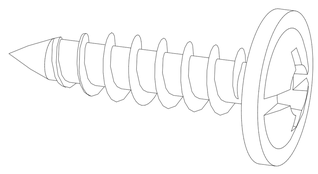	4,2*16mm	x4	R3	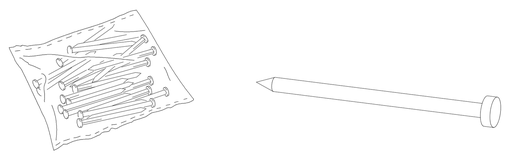	1,4*25mm	x22

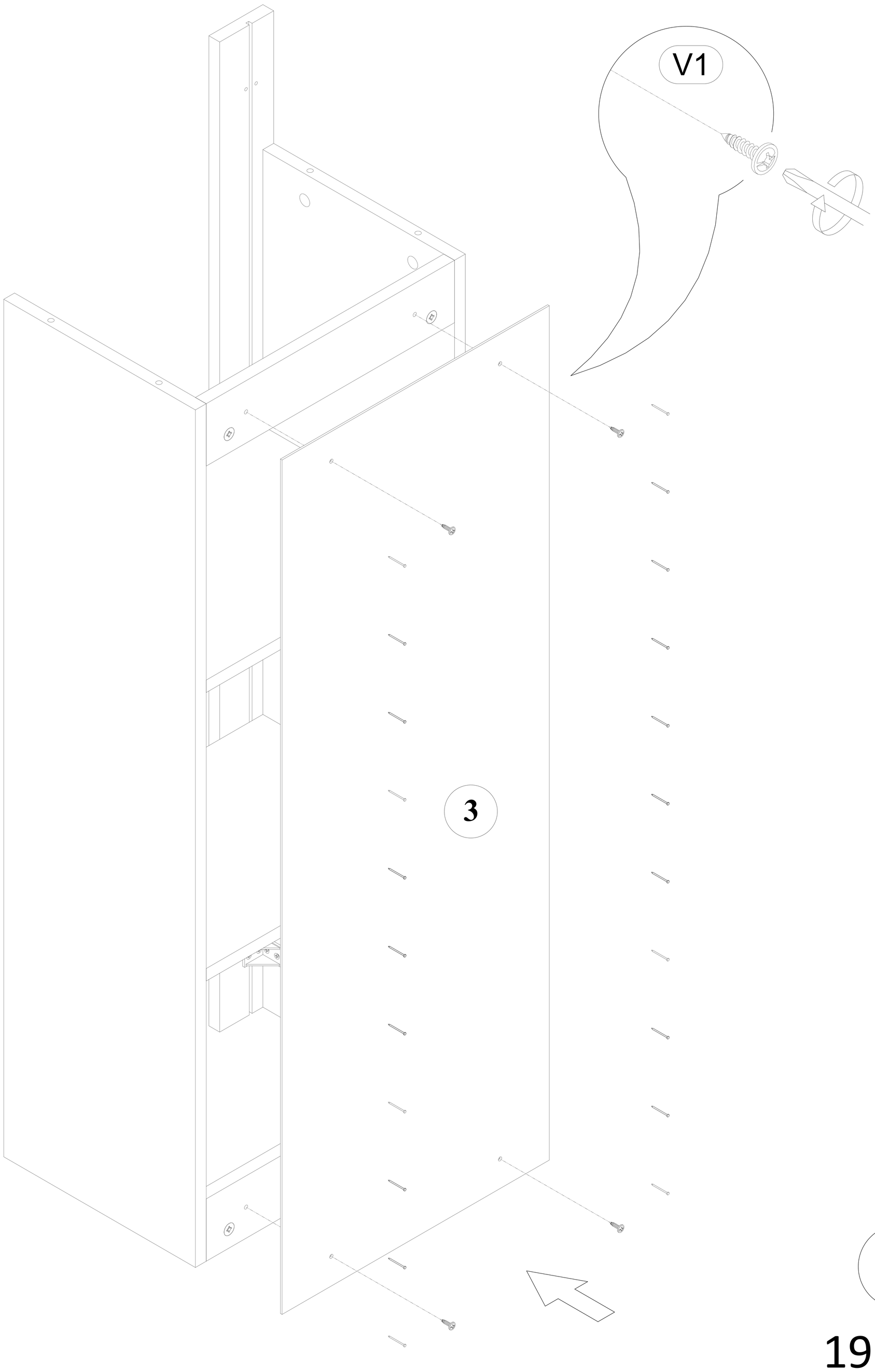

Y

D	Ø20mm	x4
D1	15/16mm	x4
C1	6*43mm	x4

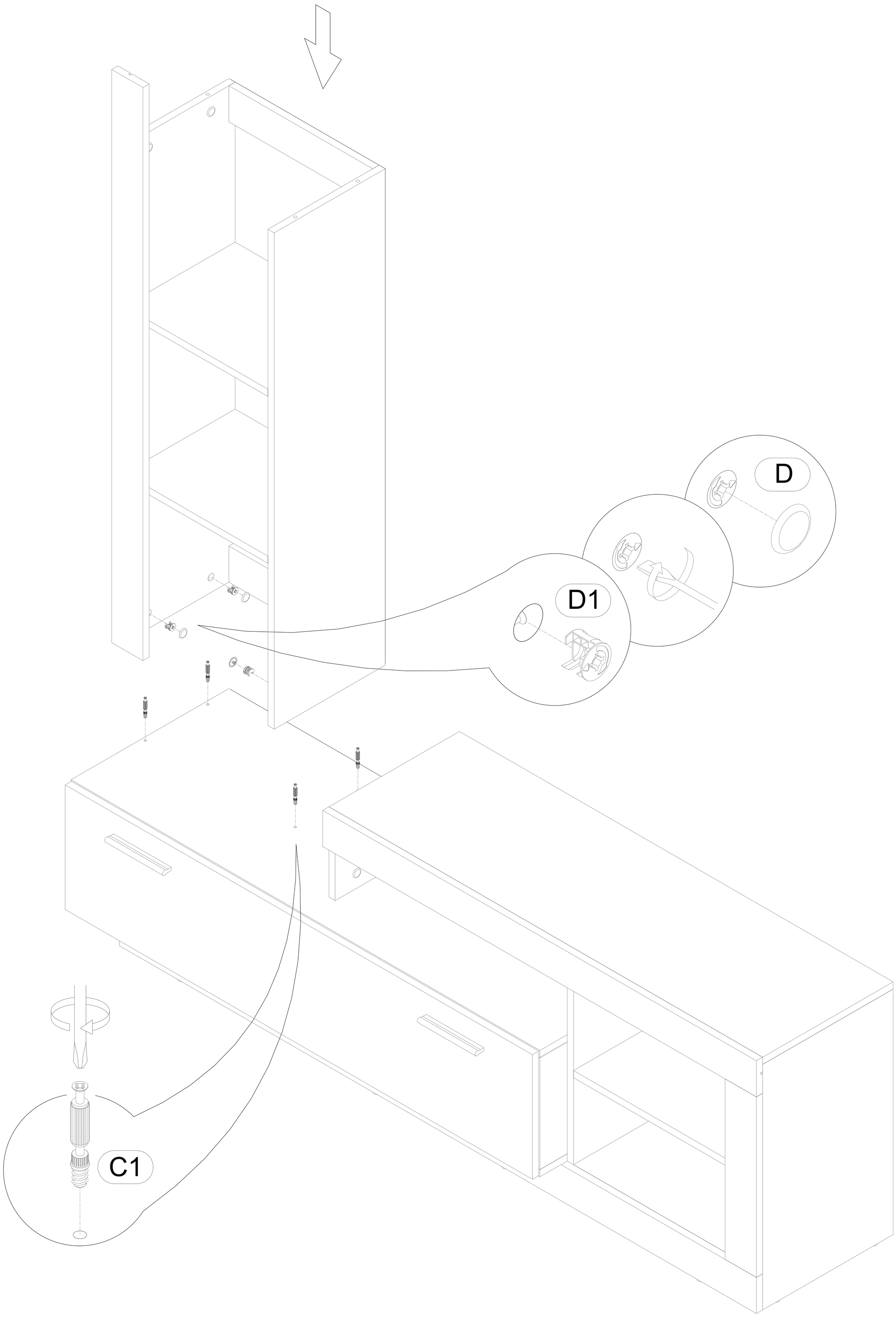

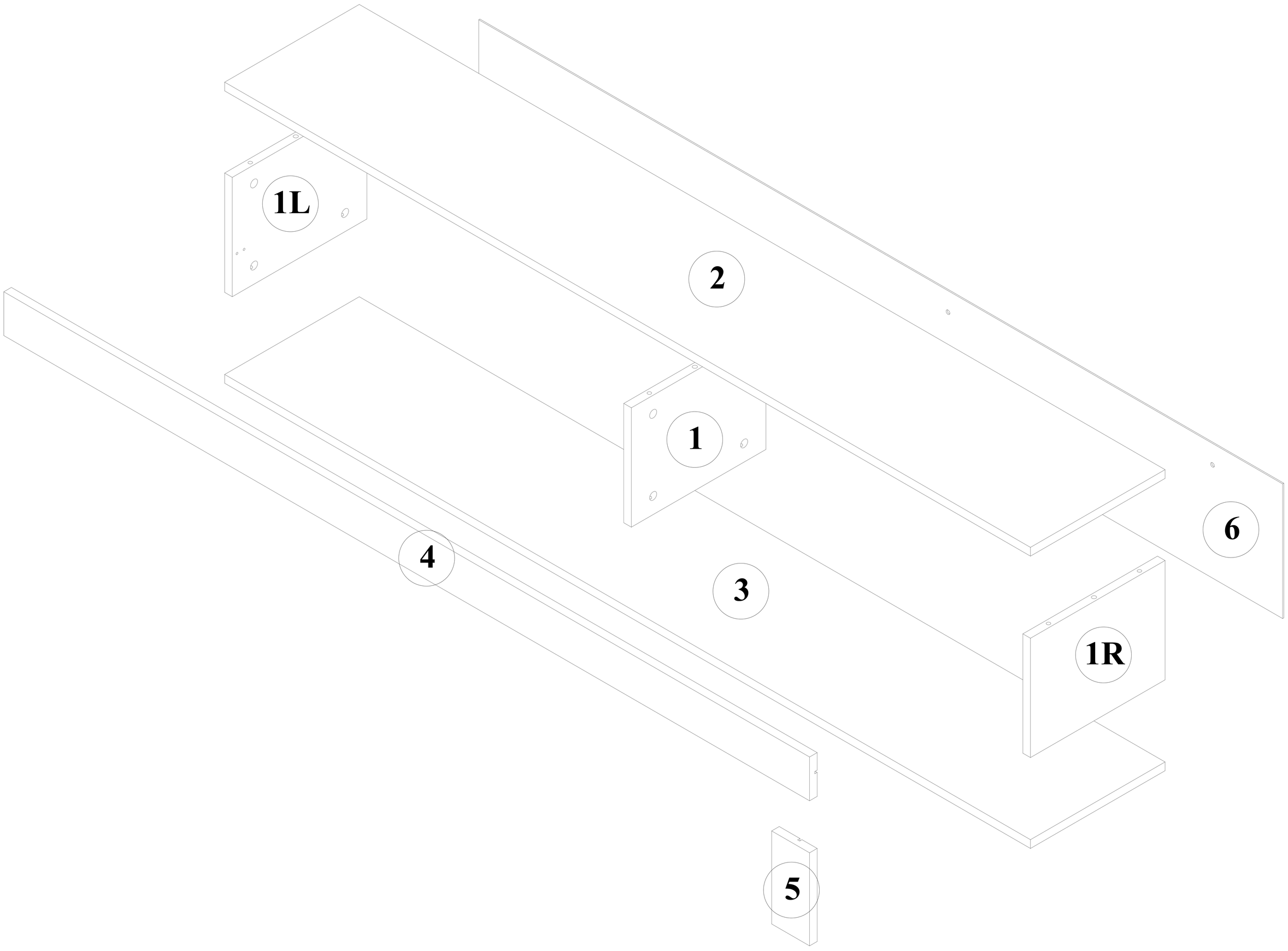

Z

E5	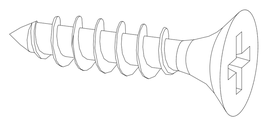 3,5x16	x20	V2	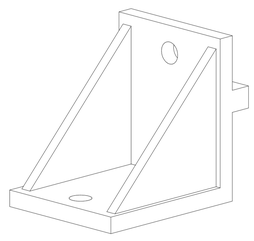	x5

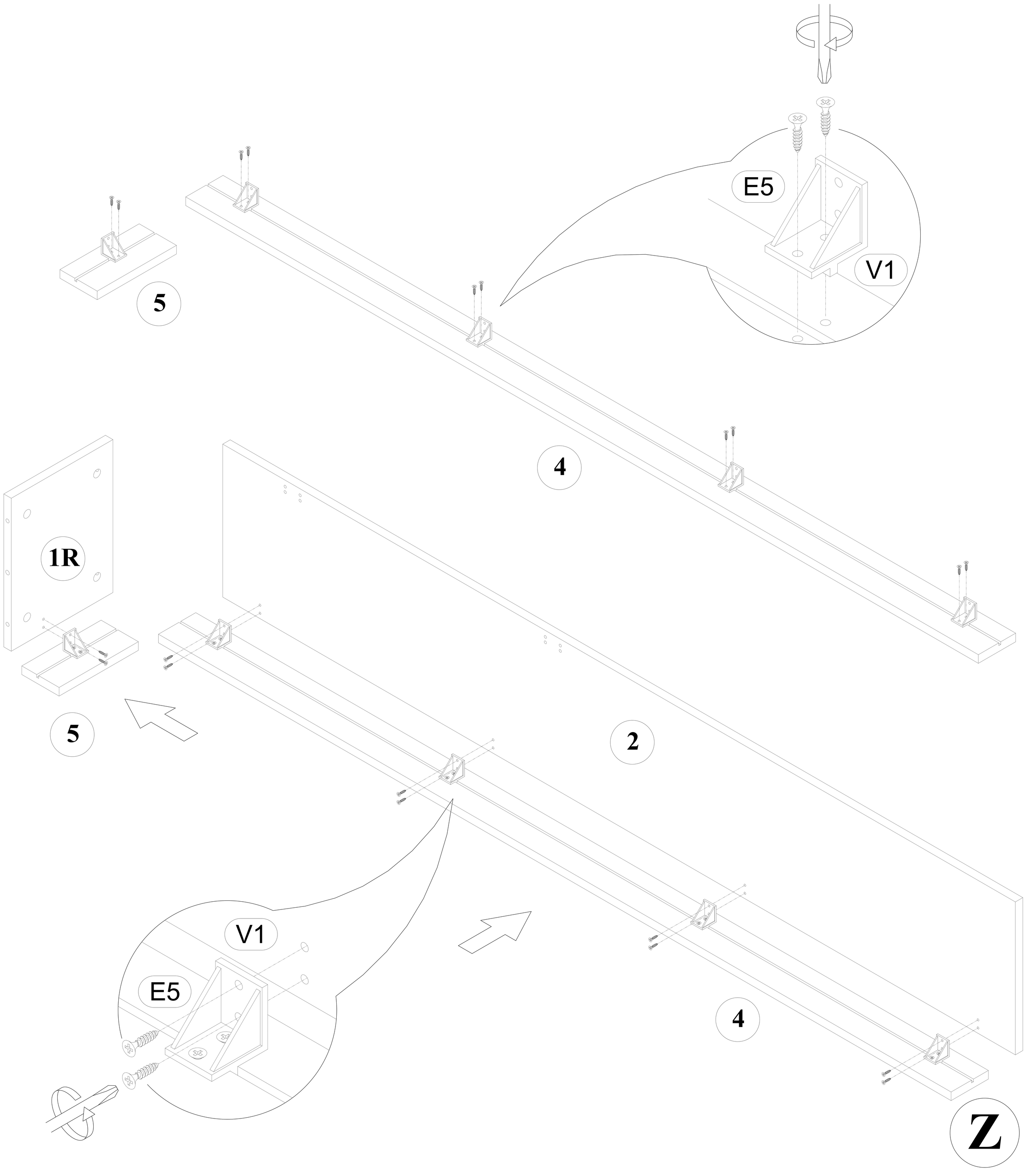

Z

D	Ø20mm	x12
D1	15/16mm	x12
C1	6*43mm	x12
A1	8*30mm	x6

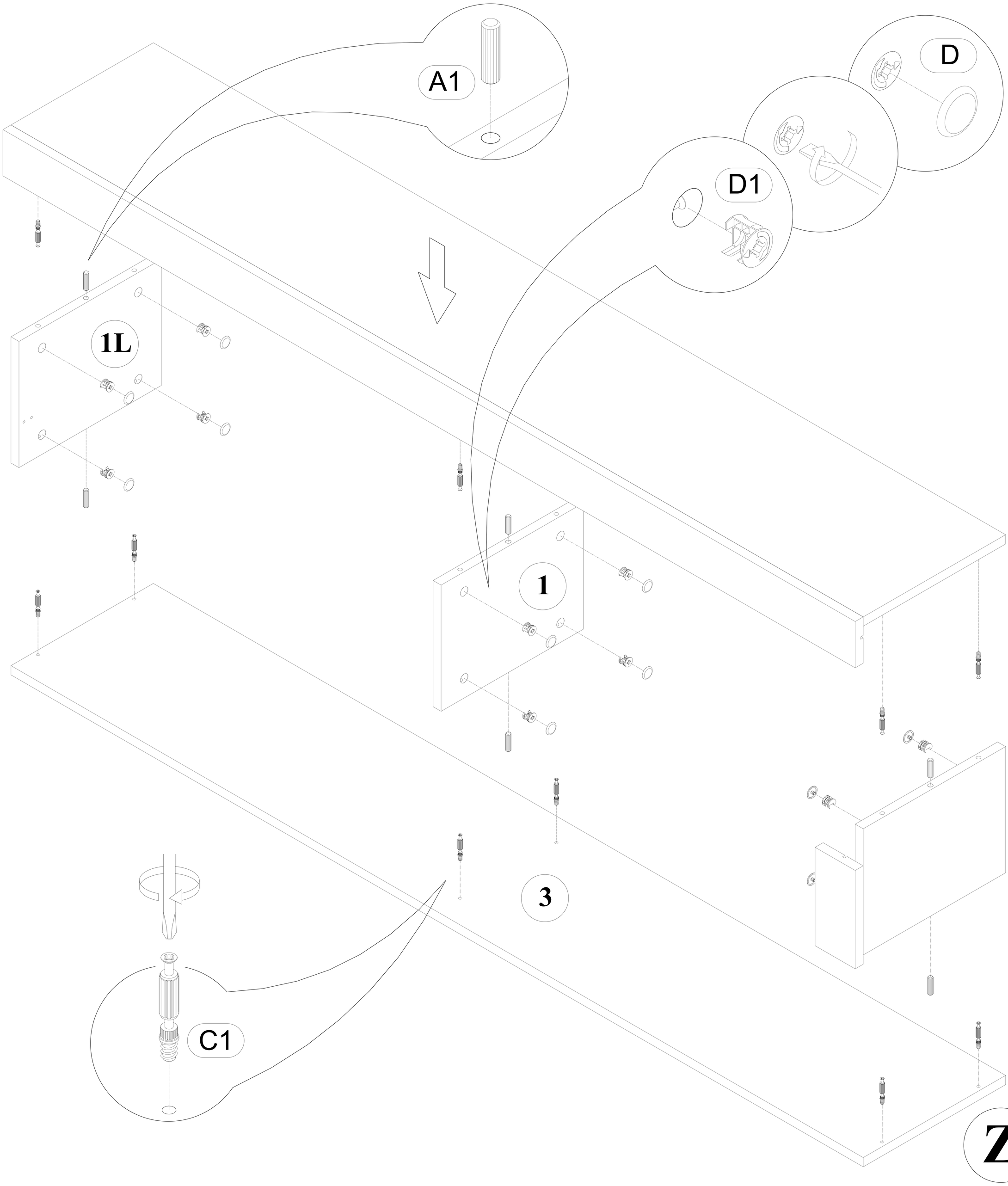

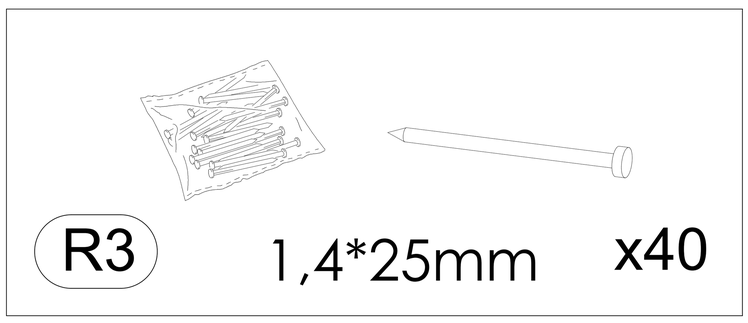
R3
1,4*25mm
x40

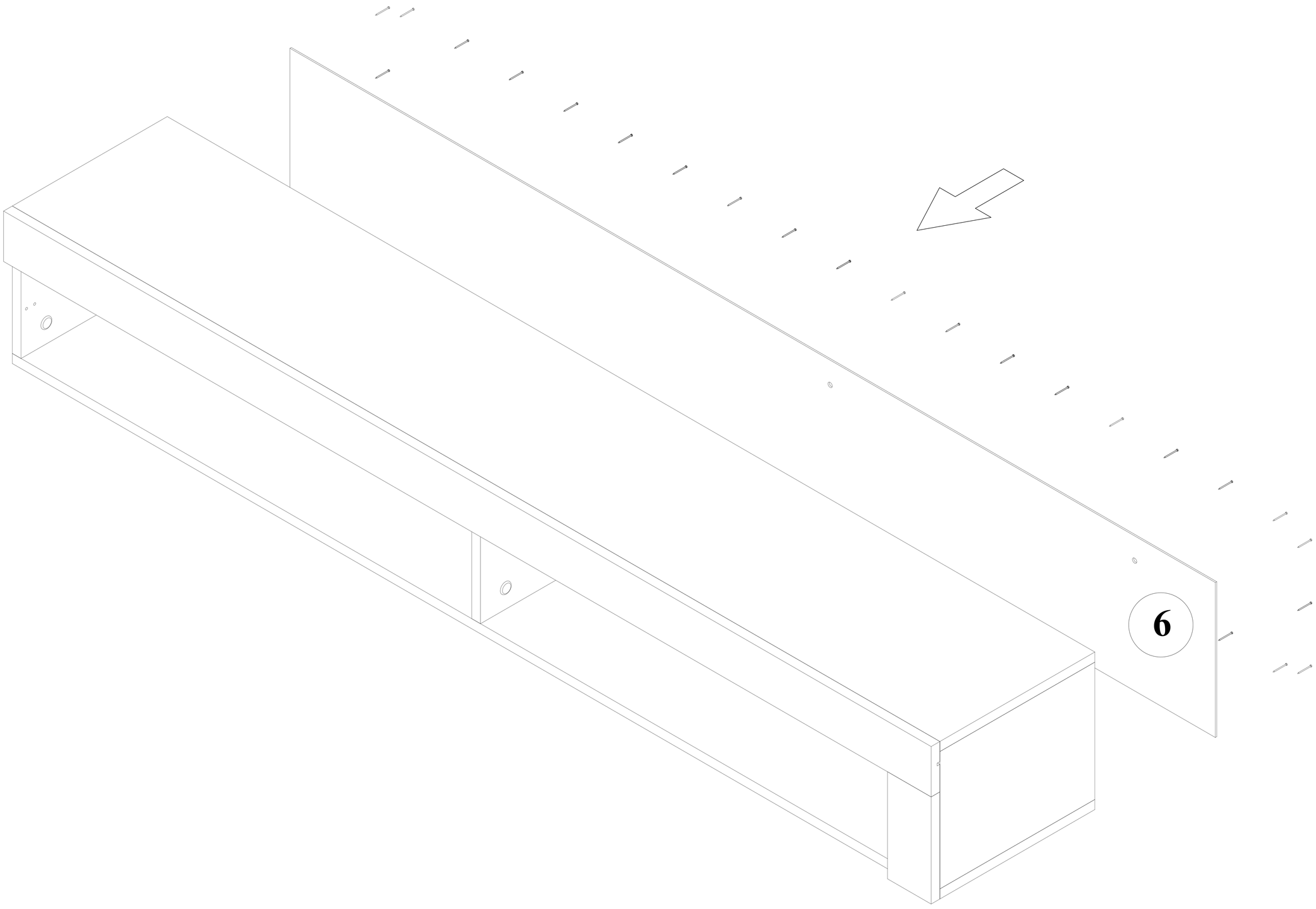
6

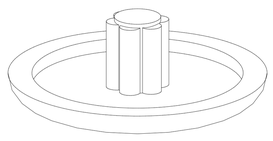 D	Ø20mm	x4
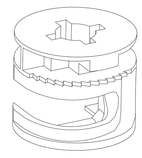 D1	15/16mm	x4
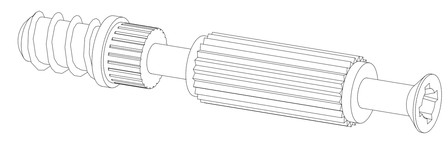 C1	6*43mm	x4

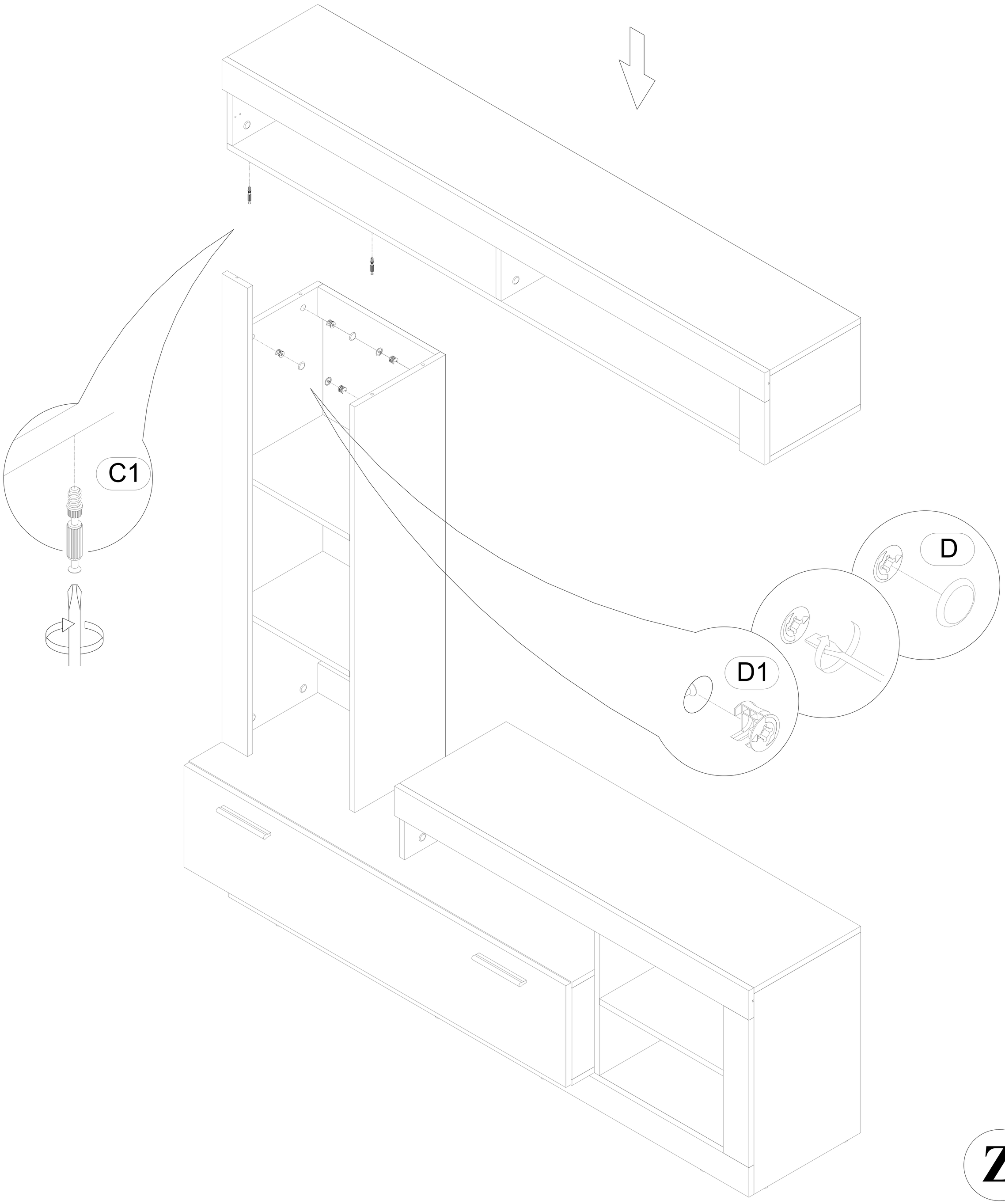

H5	8*50mm	x2
Ea4	4,2*65mm	x2
V3		x2
E5	3,5x16	x8

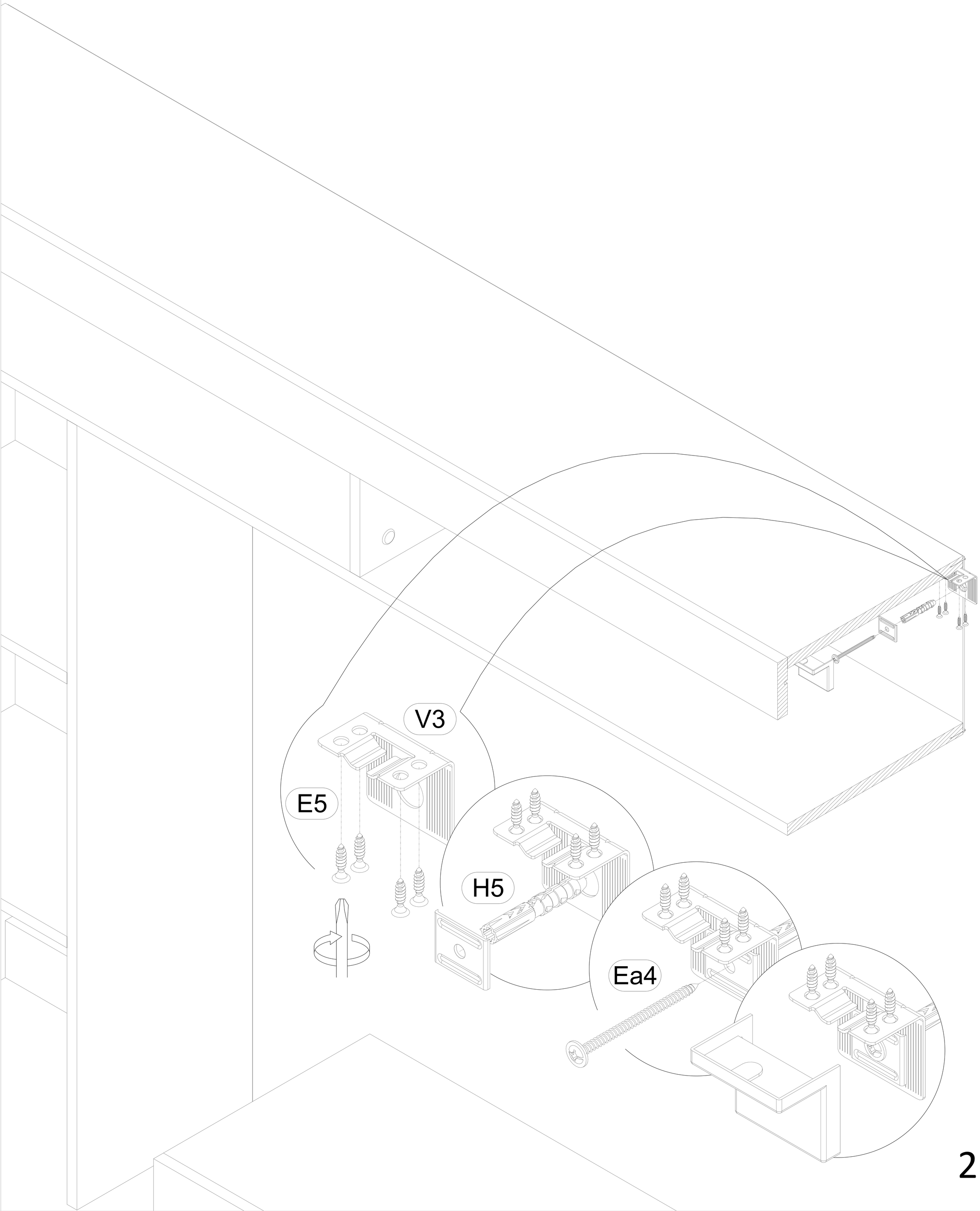

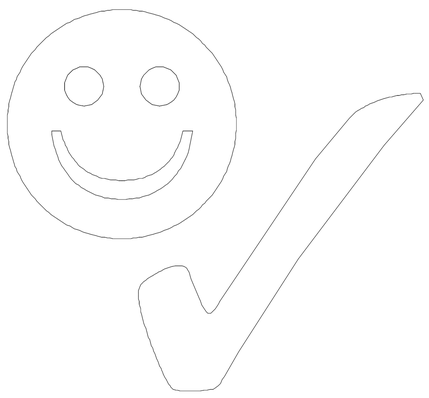

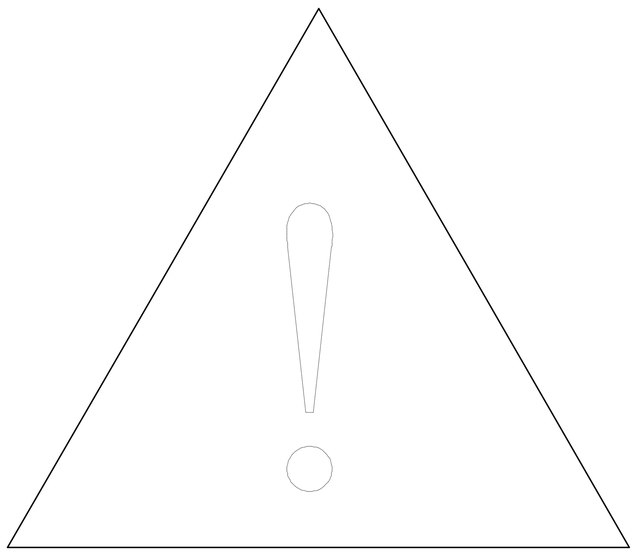

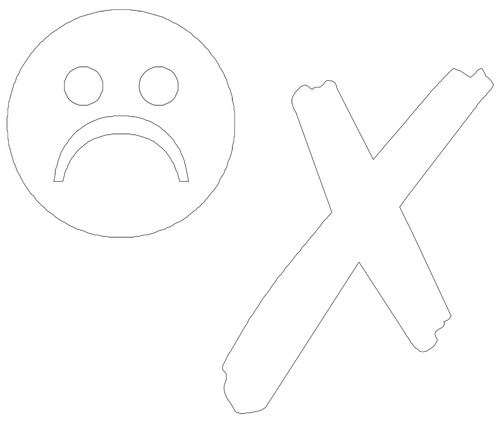

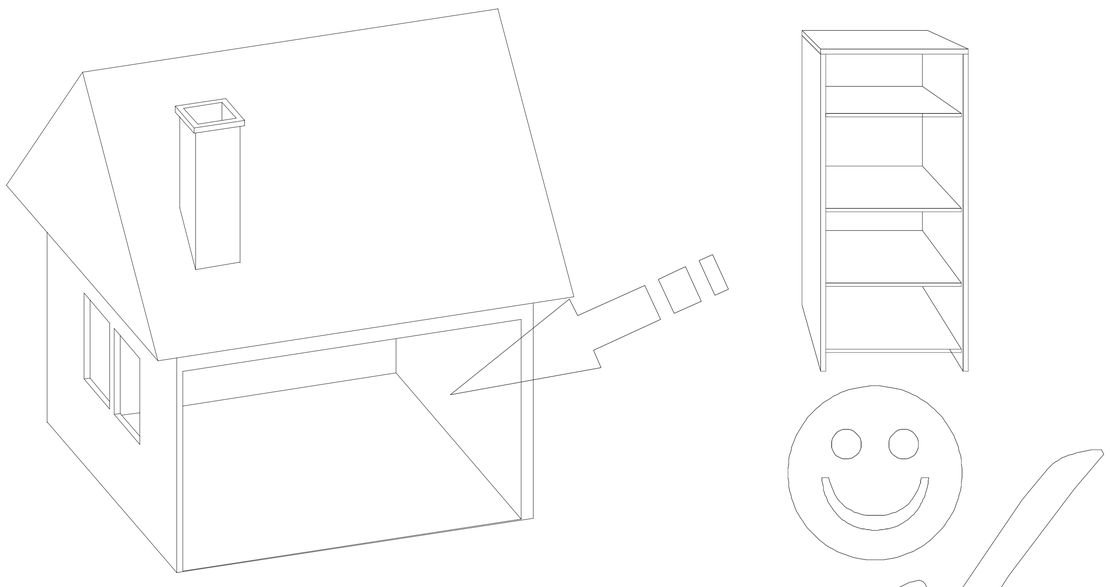

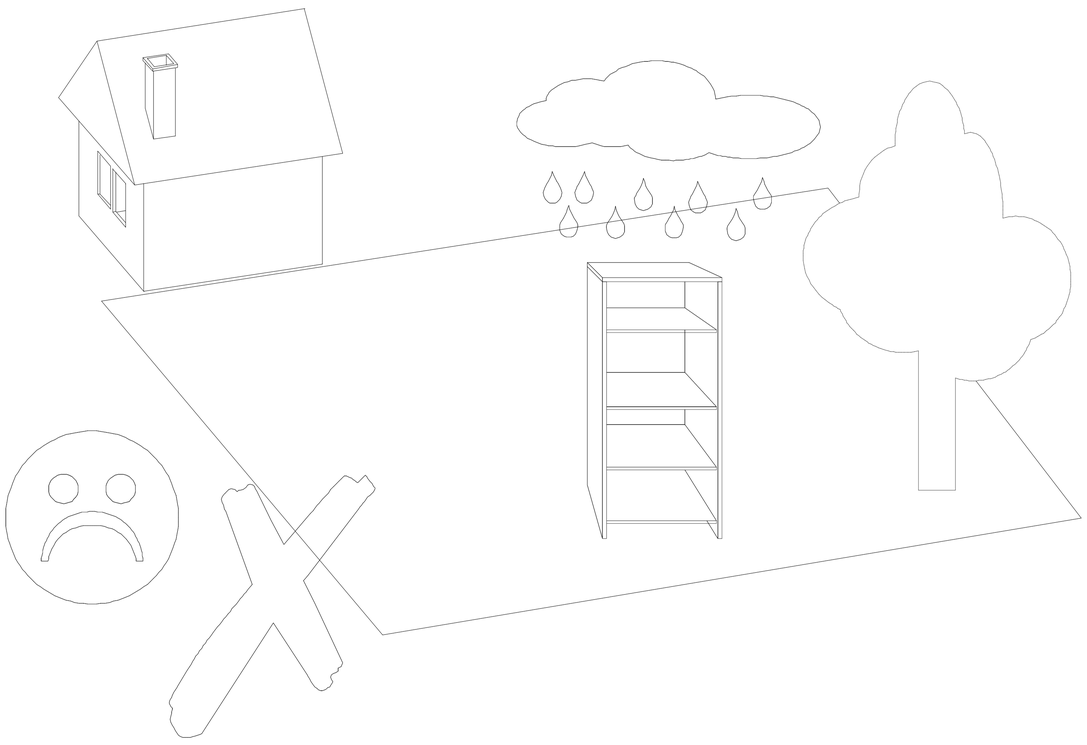

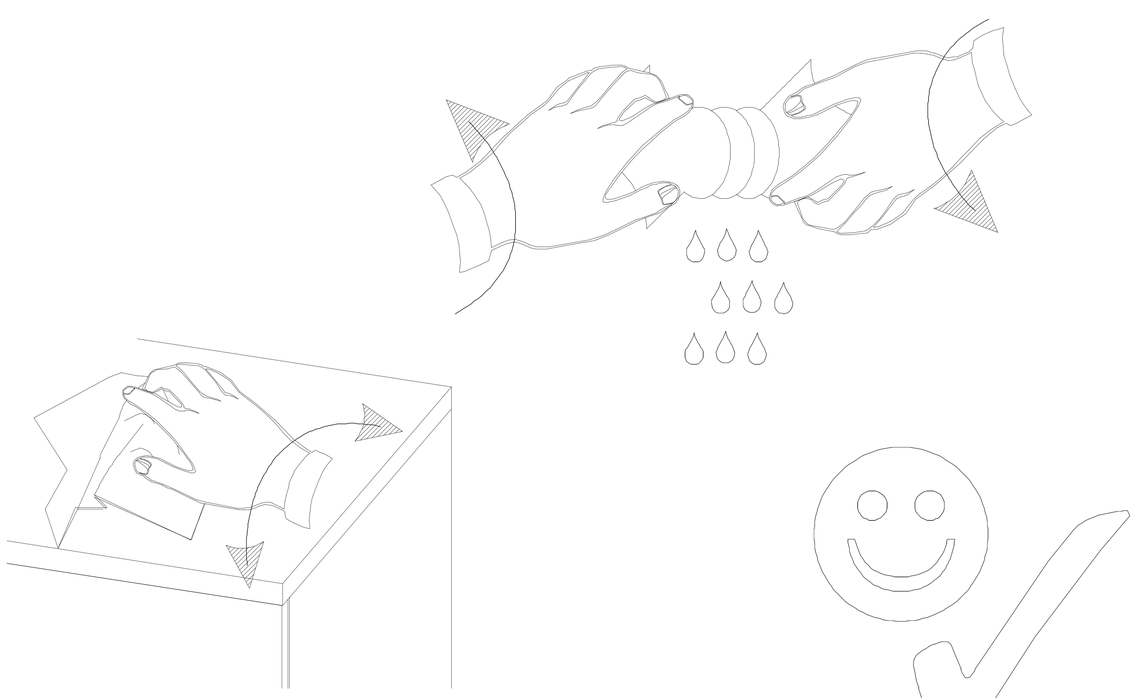
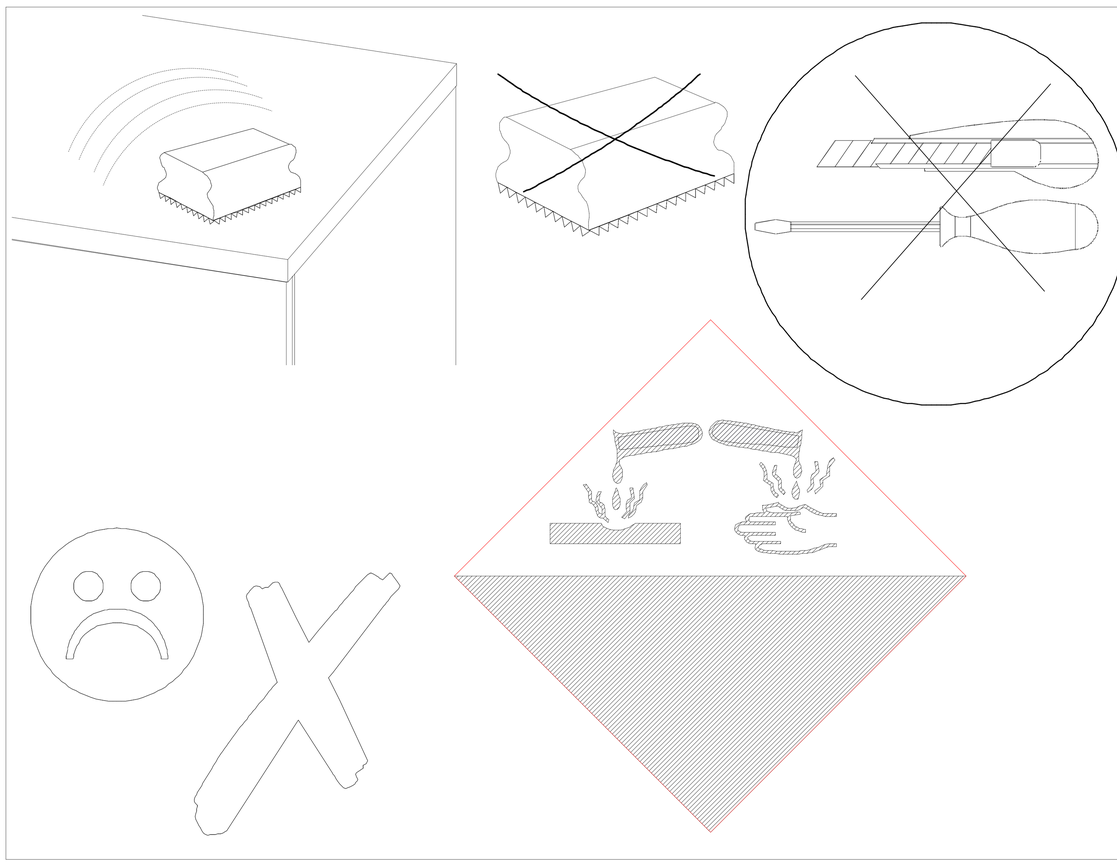
60 C°