СВІТ МЕБЛІВ

RIO

TV-STAND 1.8

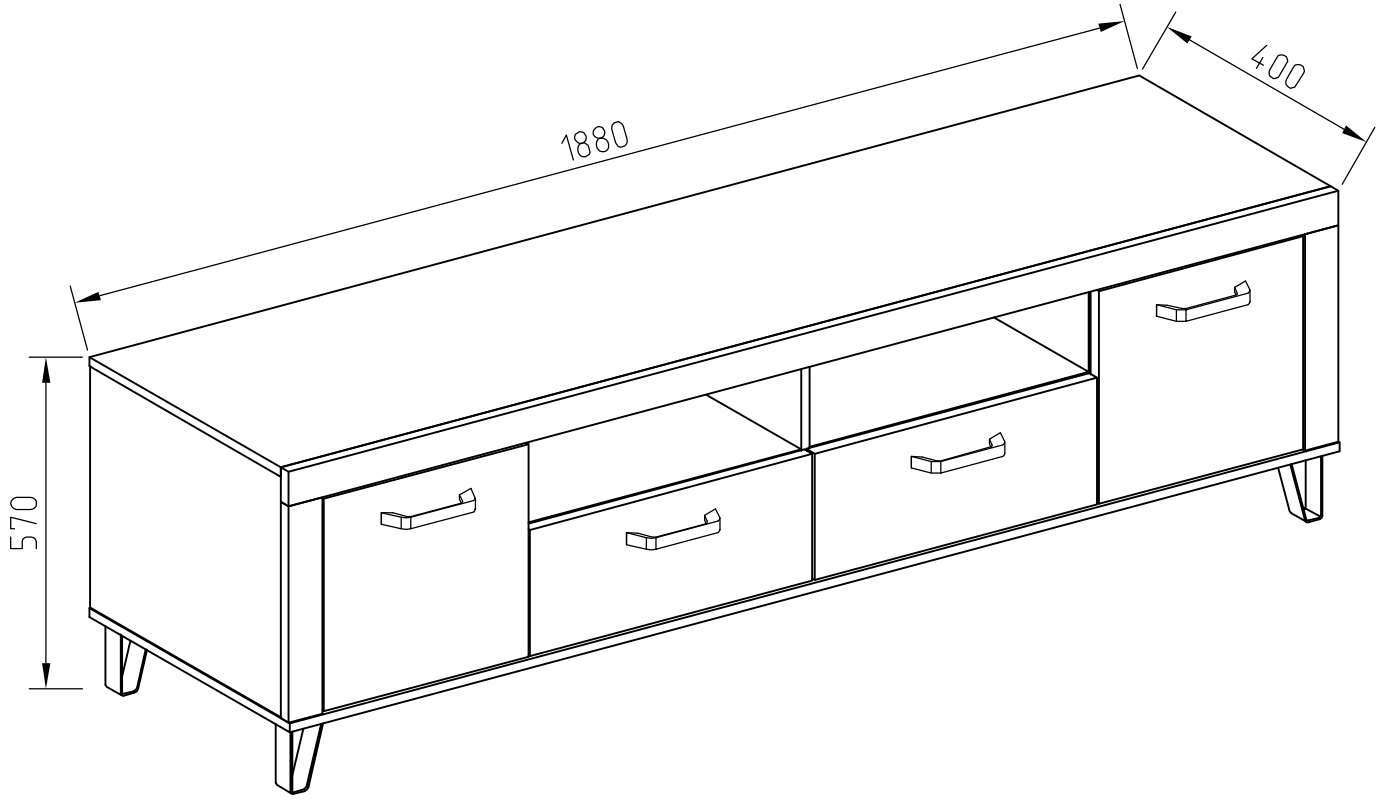

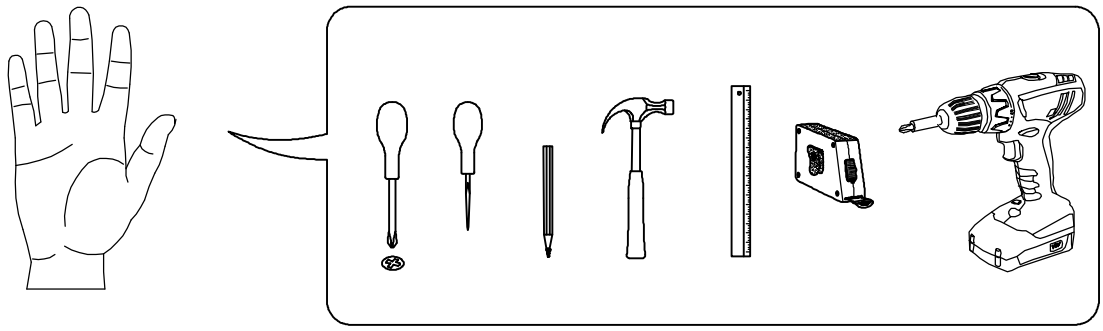

A1 8*30mm x42	A1 8*50mm x4	B x16
B1 6,3*50mm x16	C1 5*30mm x26	C2 8*56mm x4
D x34	D1 16mm x34	E5 3,5*16 x16
E11 4*16mm x32	E13 4*35mm x8	Ea2 4,2*16mm x6
F2 6,3*13mm x8	H2 x14	I23 x4
K18 H-120mm x6	L4 180° x4	M2 L-350mm x2
R4 N°4 x1	U3 x8	

№	a*b	x	№→...
1L	418x382	x1	1/2
1R	418x382	x1	1/2
2L	418x368	x1	1/2
2R	418x368	x1	1/2
3	418x368	x1	1/2
4	1880x382	x1	1/2
5	1880x400	x1	1/2
6L	499x368	x1	2/2
6R	499x368	x1	2/2
7	1880x60	x1	1/2
8L	60x373	x1	2/2
8R	60x373	x1	2/2
9L	368x366	x1	2/2
9R	368x366	x1	2/2
10L	506x219	x1	1/2
10R	506x219	x1	1/2
11L	350x120	x2	2/2
11R	350x120	x2	2/2
12	441x120	x2	1/2
13	343x450	x2	2/2
14	1855x427	x1	1/2
	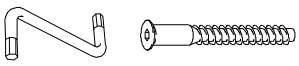	x1	2/2

RIO

TV-STAND 1.8

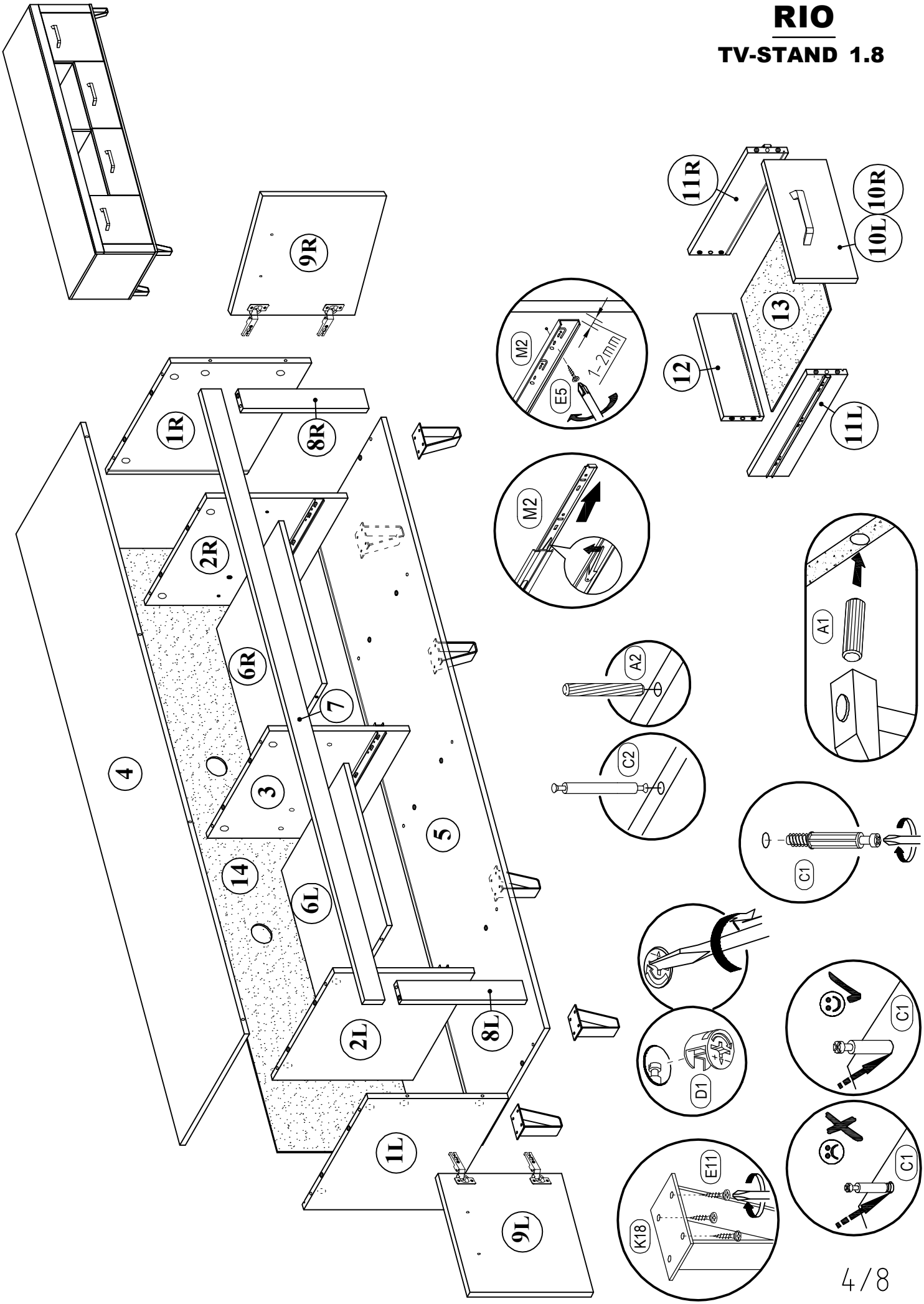

RIO

TV-STAND 1.8

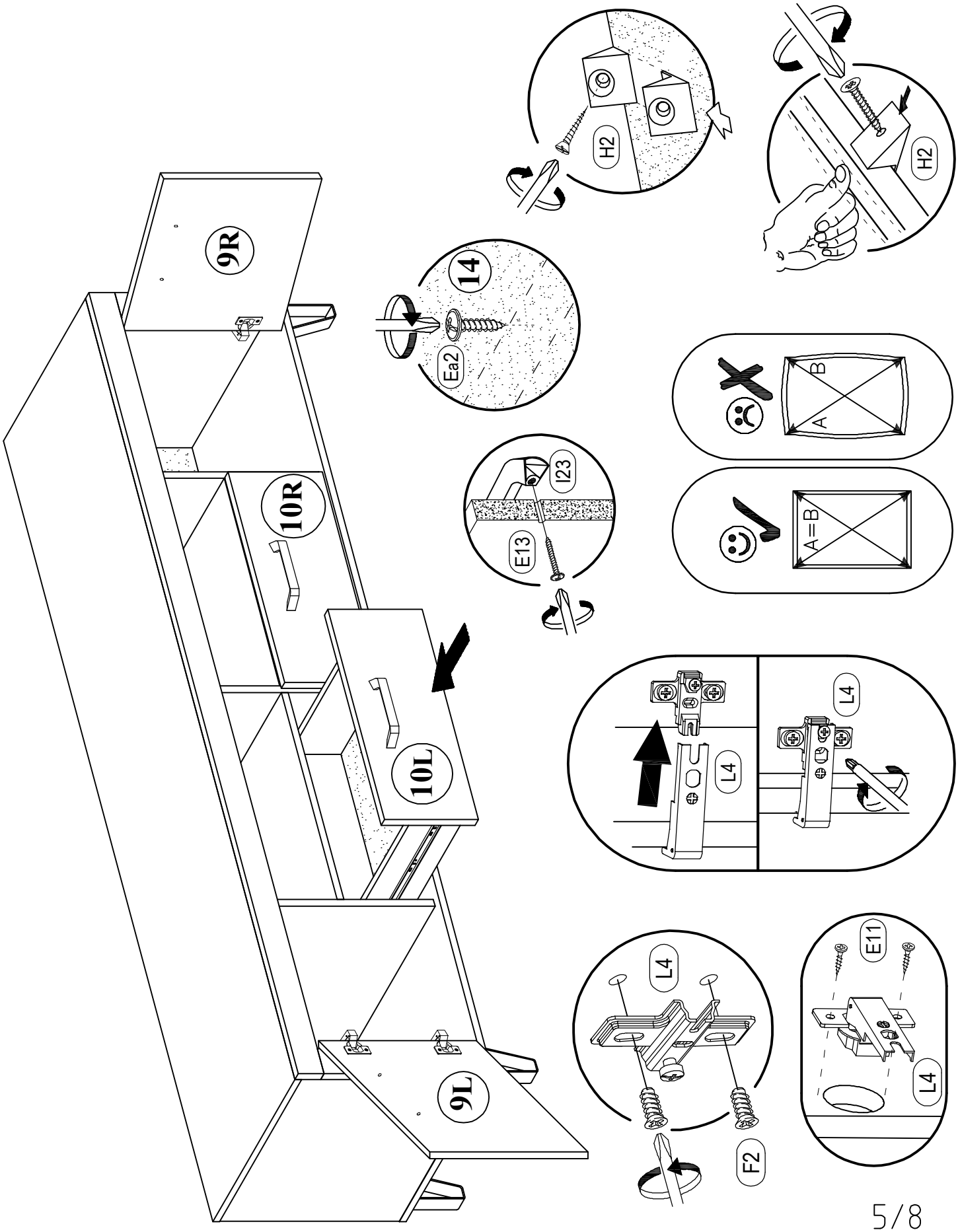

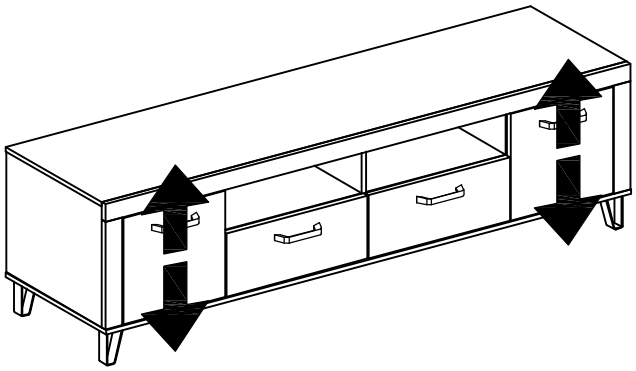

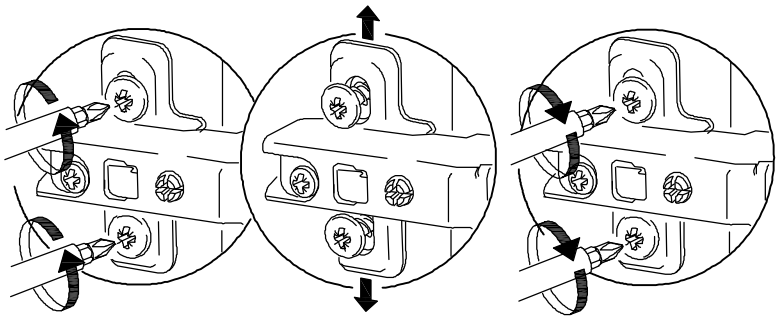

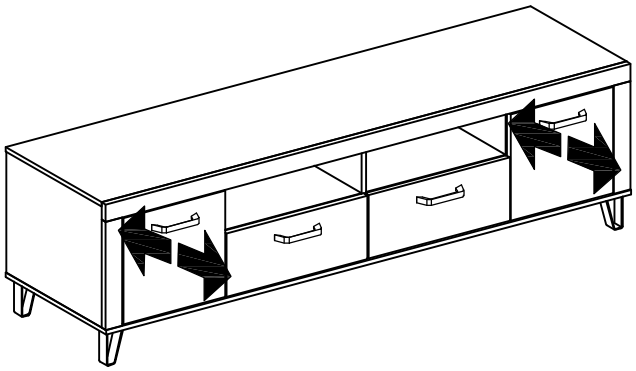

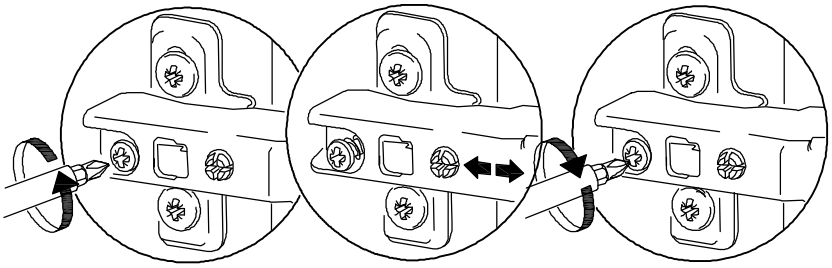

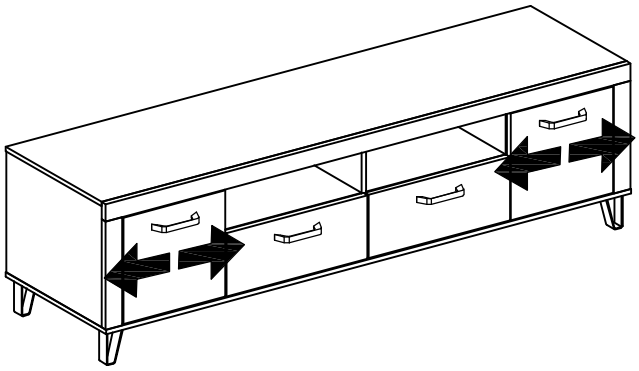

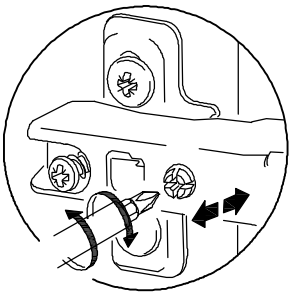

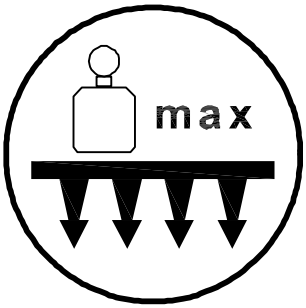
max

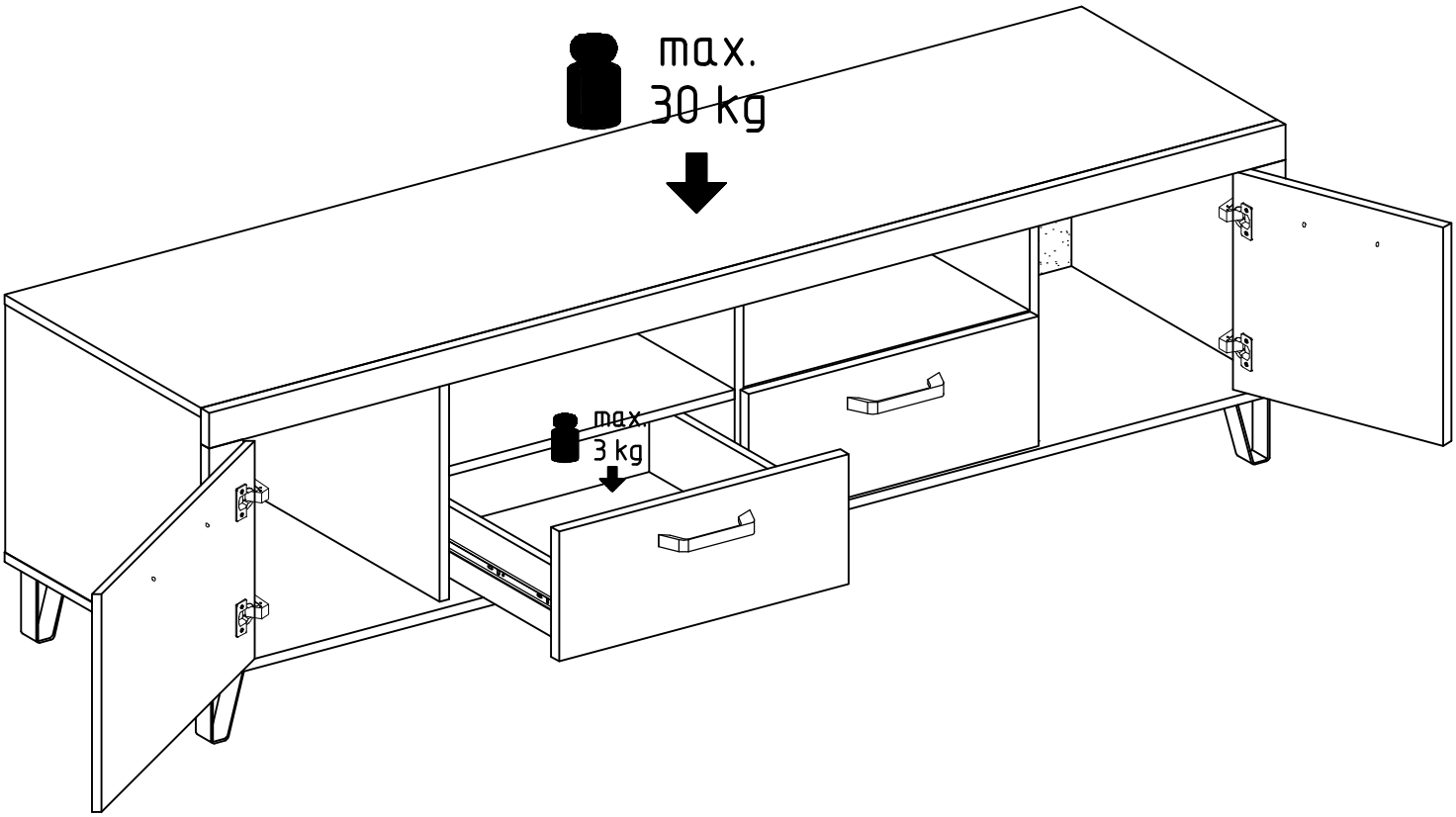
max.
30 kg
max.
3 kg

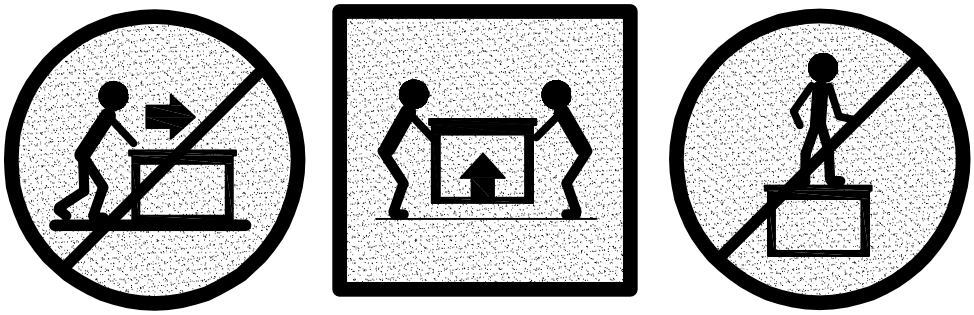

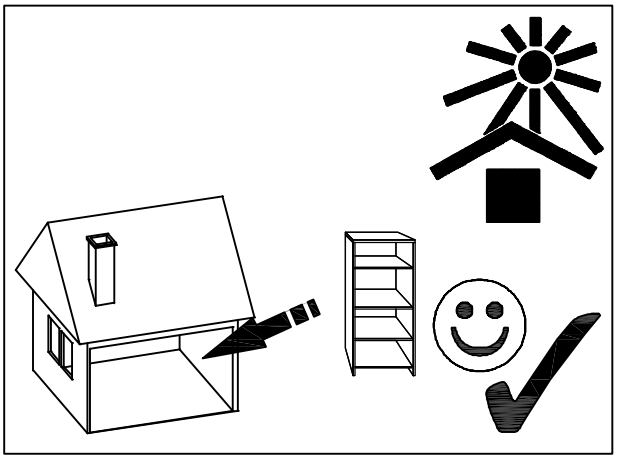
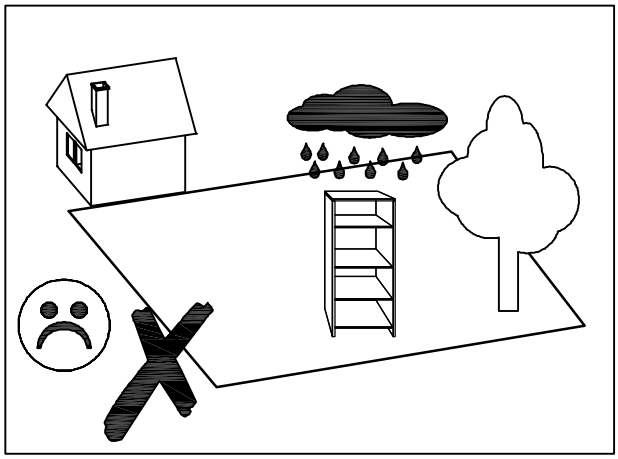
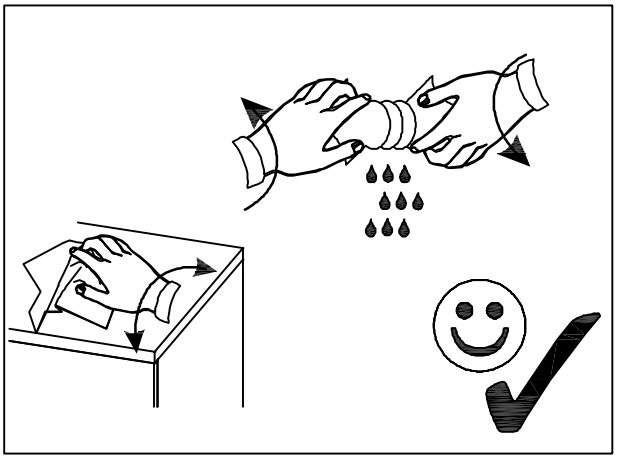
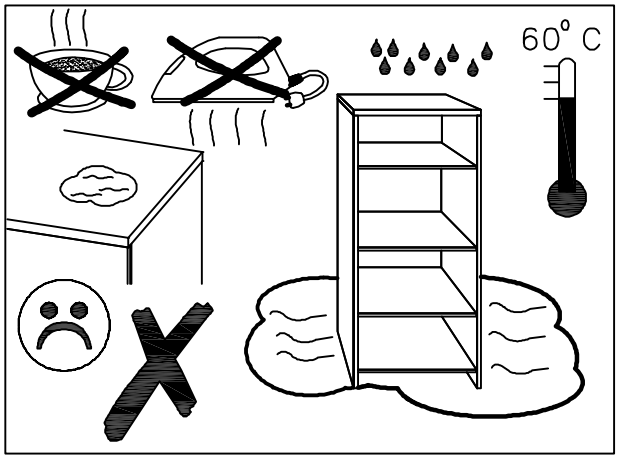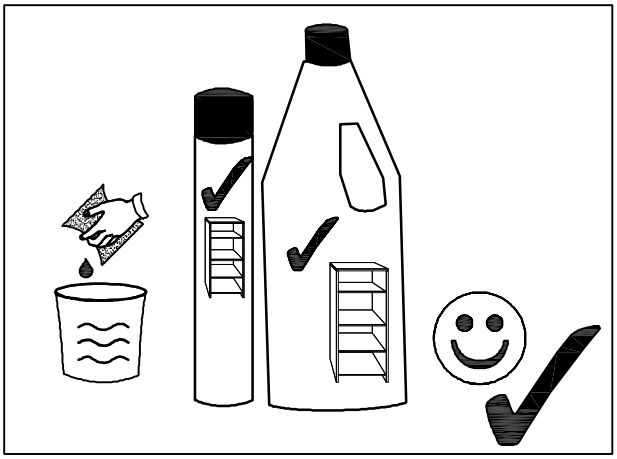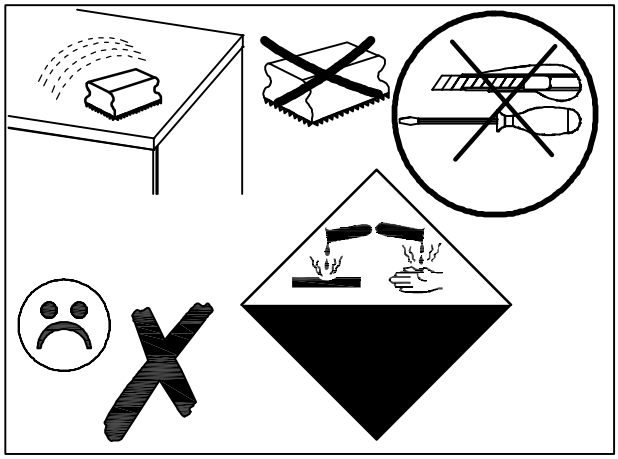
60° C